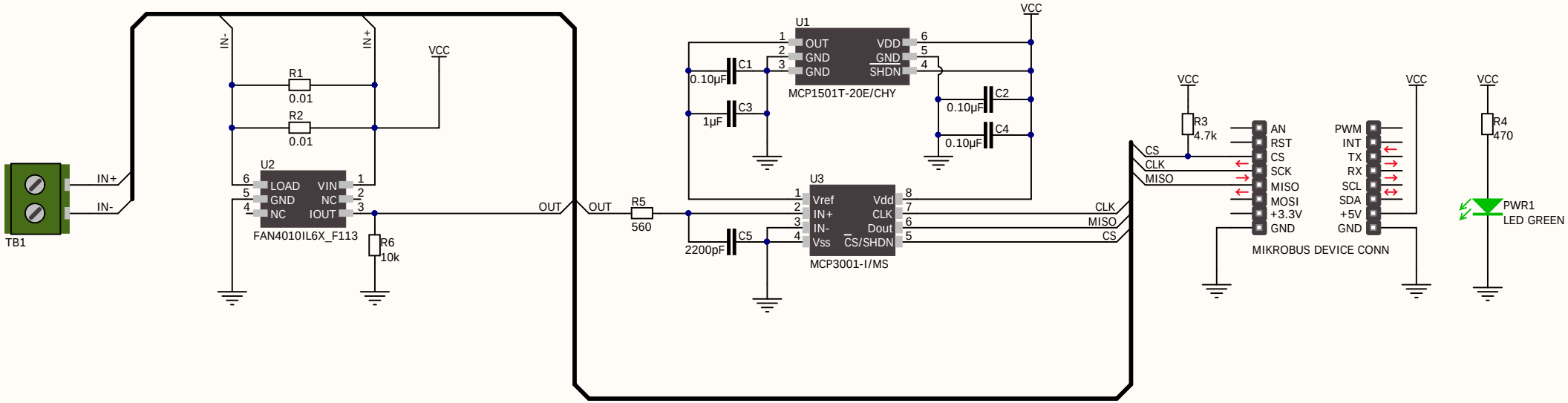

Jumper Table		
Designator	Name	Description

ProjectName:	Current_2_click_v100.PrjPcb		MikroElektronika Batajnicki drum 23 11186 Zemun, Belgrade Serbia www.mikroe.com
Design Engineer:	Dragan Stefanovic	Revision: V100	Size: A4
Date: 8.1.2019	Time: 11:01:26	Sheet 1 of 1	
File: D:\Gitlab\Current_2_Click\HW\Current_2_click_v100\Project Files\Current_2_click_v100.SchDoc			