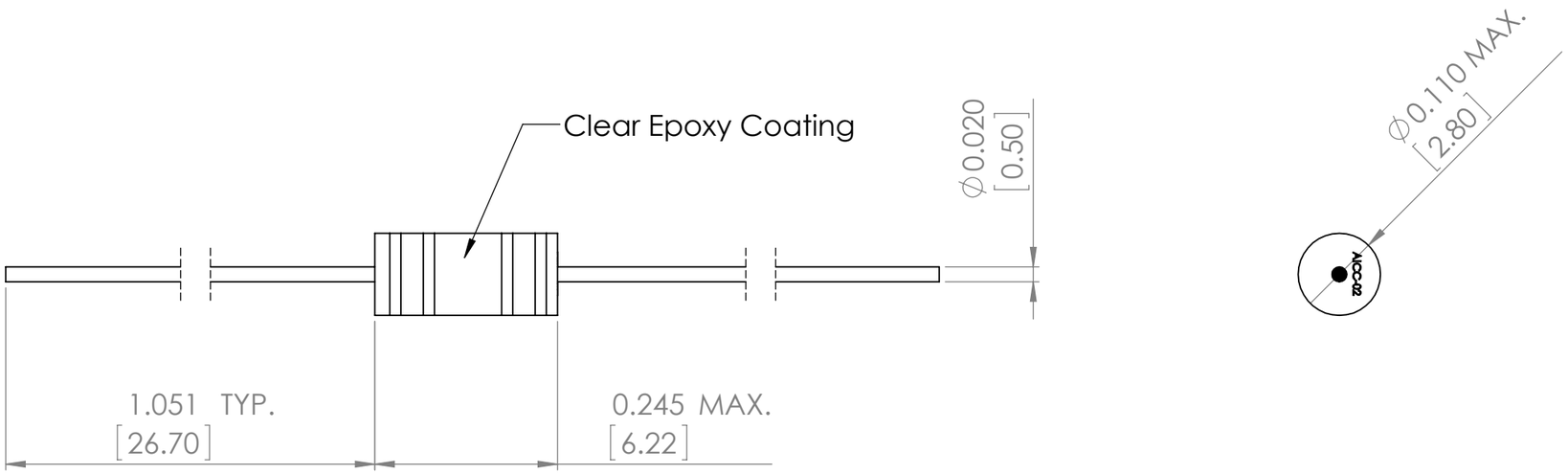

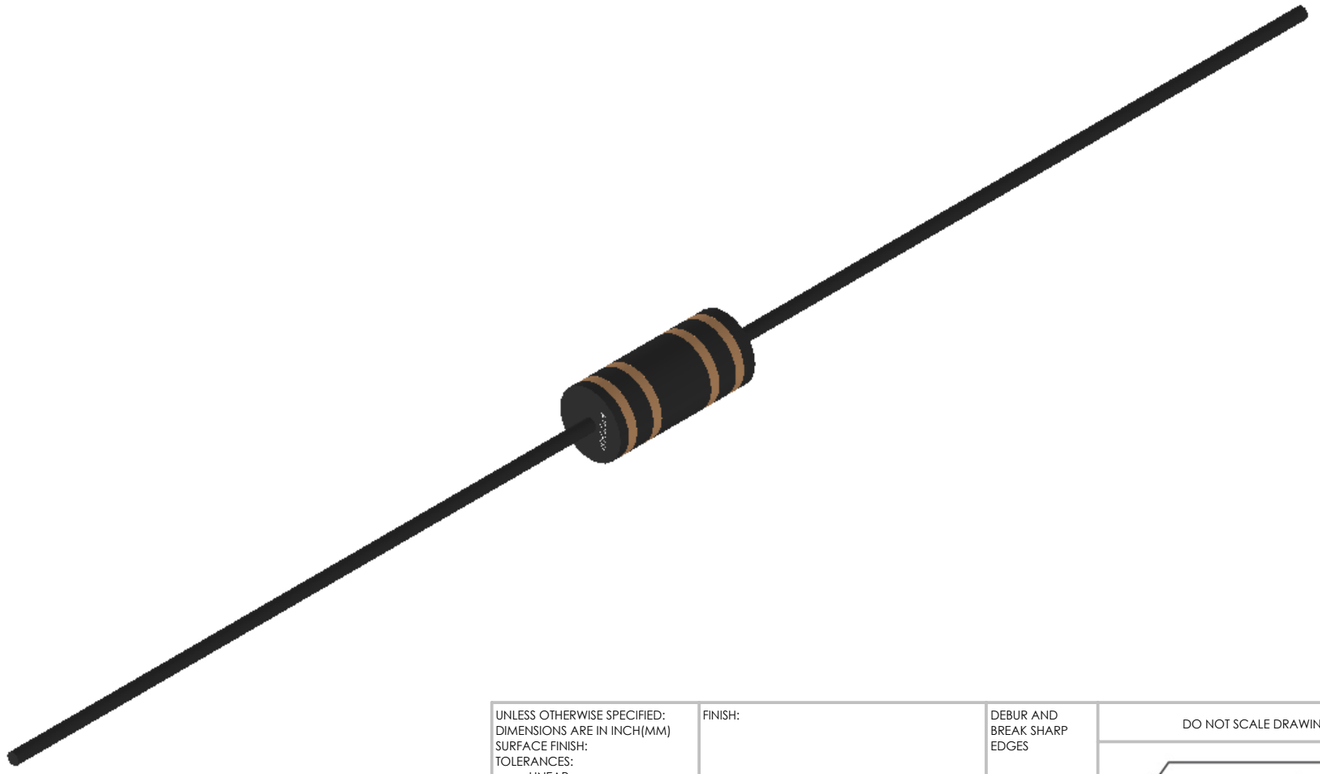

UNLESS OTHERWISE SPECIFIED: DIMENSIONS ARE IN INCH(MM) SURFACE FINISH: TOLERANCES: LINEAR: ANGULAR:	FINISH:					DEBUR AND BREAK SHARP EDGES
	NAME	SIGNATURE	DATE			
DRAWN	SAAZVAT					
CHK'D	XXXXXX					
APPV'D						
MFG						
Q.A				MATERIAL:		
				WEIGHT:		

DO NOT SCALE DRAWING

REVISION -

ABRACON CORPORATION

30332 Esperanza, Rancho Santa margarita, California 92688

TITLE: Axial Leaded

DWG NO. AICC-02

A3

SCALE:5:1

SHEET 1 OF 1