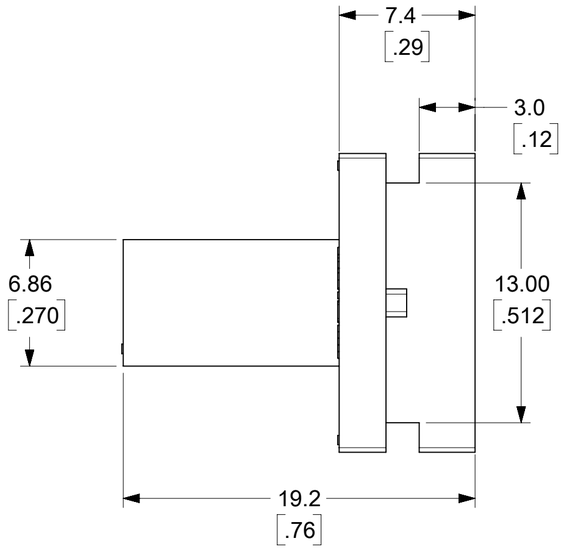

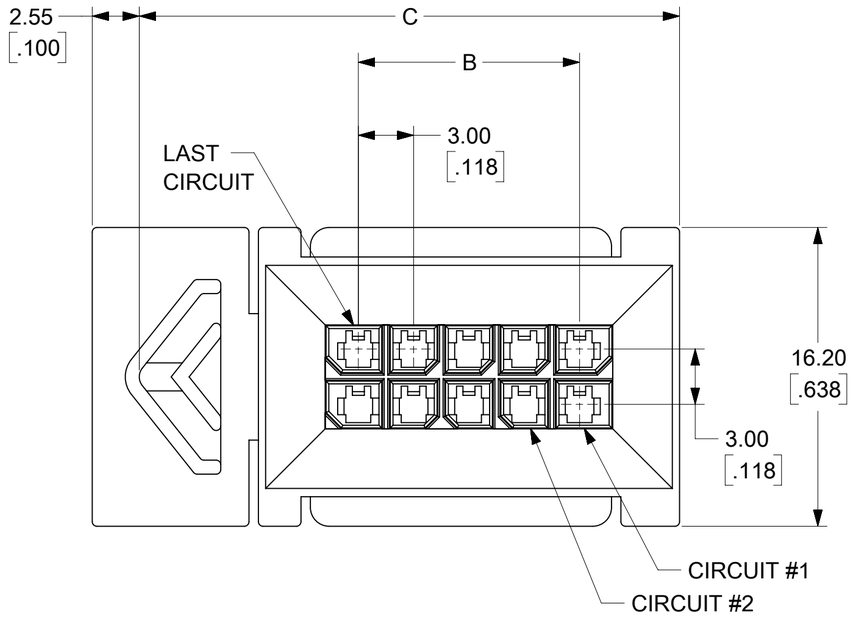

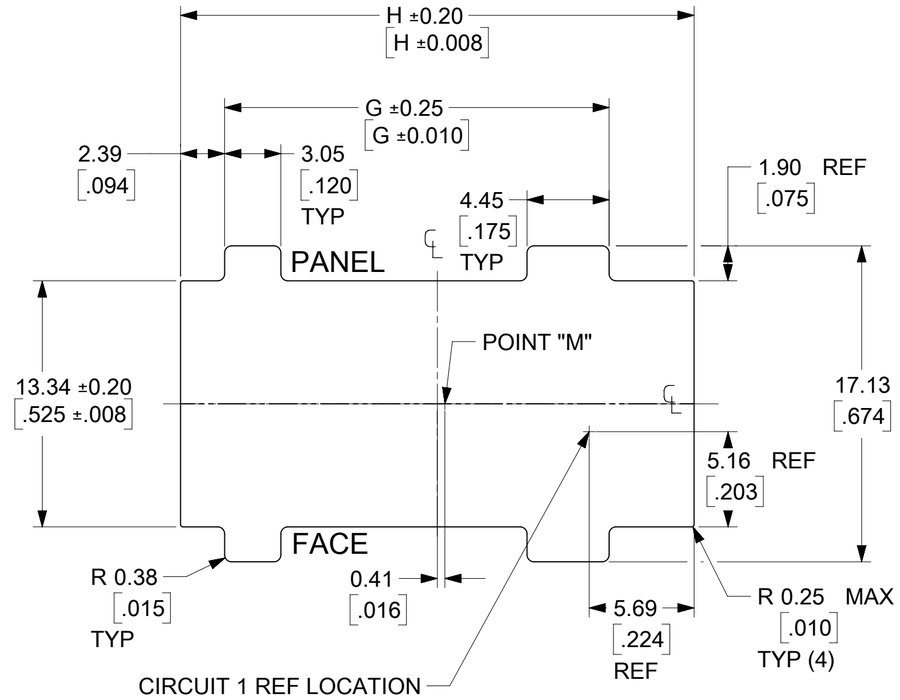

RECOMMENDED PANEL CUTOUT

(SEE NOTES 7 & 8)

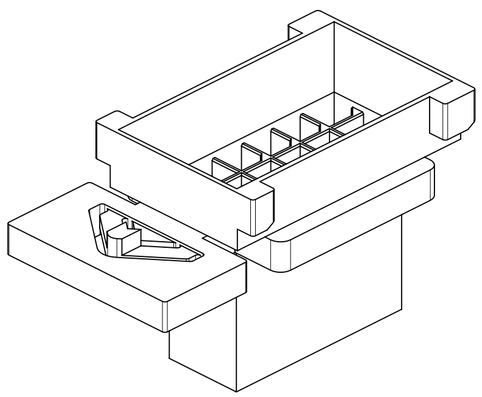

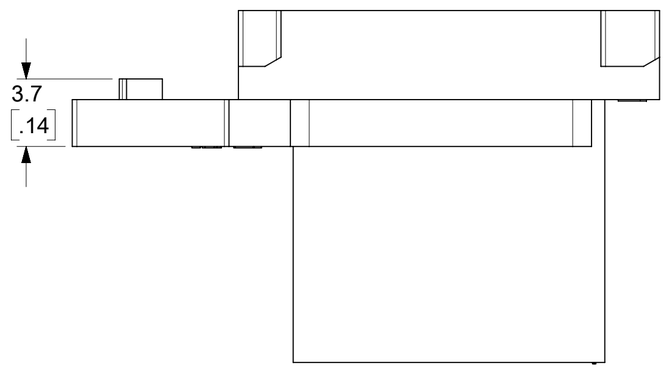

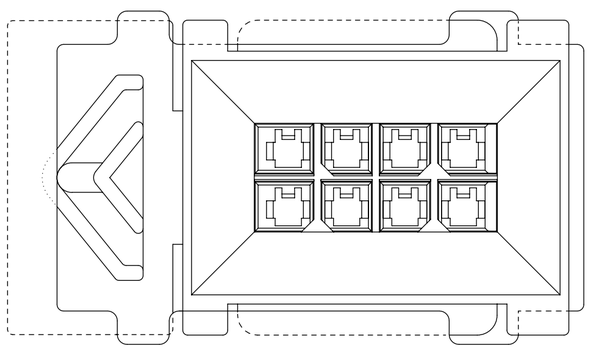

PLUG SHOWN MOUNTED IN PANEL

CIRCUIT SIZE	MATERIAL NUMBER	DIM "B"	DIM "C"	DIM "G"	DIM "H"
4		3.00 / .118	20.5 / .81	14.85 / .585	21.05 / .829
6		6.00 / .236	23.5 / .93	17.85 / .703	24.05 / .947
8		9.00 / .354	26.5 / 1.04	20.85 / .821	27.05 / 1.065
10	44300-1011	12.00 / .472	29.5 / 1.16	23.85 / .939	30.05 / 1.183
12		15.00 / .591	32.5 / 1.28	26.85 / 1.057	33.05 / 1.301
14		18.00 / .709	35.5 / 1.40	29.85 / 1.175	36.05 / 1.419
16		21.00 / .827	38.5 / 1.52	32.85 / 1.293	39.05 / 1.537
18		24.00 / .945	41.5 / 1.63	35.85 / 1.411	42.05 / 1.656
20		27.00 / 1.063	44.5 / 1.75	38.85 / 1.530	45.05 / 1.774
22		30.00 / 1.181	47.5 / 1.87	41.85 / 1.648	48.05 / 1.892
24		33.00 / 1.299	50.5 / 1.99	44.85 / 1.766	51.05 / 2.010

DOCUMENT STATUS	P1	RELEASE DATE	2021/10/21 16:18:10

NOTES:

1. MATERIAL: UNFILLED NYLON, UL94V-0, IEC 60335-1 GLOW WIRE CAPABLE, COLOR: BLACK.
2. FINISH: N/A
3. PRODUCT SPECIFICATION: PS-44300-001
4. PACKAGING SPECIFICATION: PK-44300-001
5. THIS PLUG MATES WITH MOLEX BMI RECEPTACLE SERIES 44133 AND BMI RECEPTACLE HEADERS SERIES 44764 AND 44769.
6. THIS PLUG TO BE USED WITH MOLEX MALE CRIMP TERMINALS ONLY. 43031-0xxx
7. THIS PLUG IS DESIGNED FOR USE WITH .062/1.57 MAX. TO .050/1.27 MINIMUM THICK PANELS.
8. WHEN MATING WITH 44133 SERIES, POINT "M" MUST ALIGN WITH THE PANEL CUT-OUT CENTERLINES DEFINED BY MOLEX DRAWING SD-44133-001.
9. HOUSING MAY EXHIBIT A SURFACE IMPERFECTION KNOWN AS "SINK MARKS" UP TO .024/0.60 MAX. THIS IS A COSMETIC DEFECT AND DOES NOT AFFECT FUNCTION OF THE CONNECTOR.
10. THIS PART CONFORMS TO CLASS 'B' REQUIREMENTS OF COSMETIC SPECIFICATION PS-45499-002.

FUNCTIONAL SYMBOLS: FA = 0, FC = 0, FP = 0

DIVISIONAL SYMBOLS

THIS DRAWING CONTAINS INFORMATION THAT IS PROPRIETARY TO MOLEX ELECTRONIC TECHNOLOGIES, LLC AND SHOULD NOT BE USED WITHOUT WRITTEN PERMISSION

DIMENSION UNITS: MM/INCH — SCALE: NTS

GENERAL TOLERANCES (UNLESS SPECIFIED)

	MM	INCH
4 PLACES	±	±
3 PLACES	±	± 0.01
2 PLACES	± 0.25	± 0.014
1 PLACE	± 0.35	±
0 PLACES	±	±
ANGULAR TOL	± 0.5 °	

DRAFT WHERE APPLICABLE MUST REMAIN WITHIN DIMENSIONS

CURRENT REV DESC: RELEASED

EC NO: 679281
DRWN: MKIPPER 2020/10/22
CHK'D: HENRYA1 2021/10/15
APPR: FSMITH 2021/10/21

INITIAL REVISION:
DRWN: MKIPPER 2020/10/22
APPR: FSMITH 2021/10/21

THIRD ANGLE PROJECTION | DRAWING: C-SIZE | SERIES: 44300

molex

MICROFIT 3.0 BMI DUAL ROW PLUG, PANEL MOUNT, V-0 AND GLOW WIRE

PRODUCT CUSTOMER DRAWING

DOCUMENT NUMBER	DOC TYPE	DOC PART	REVISION
443000011-SD	PSD	000	A

MATERIAL NUMBER	CUSTOMER	SHEET NUMBER
SEE CHART	GENERAL MARKET	1 OF 1

FORMAT: Eng-lega-master-tb-prod-C
REVISION: E
DATE: 2020/01/14