1/8 ROUND SWAGE STANDOFFS

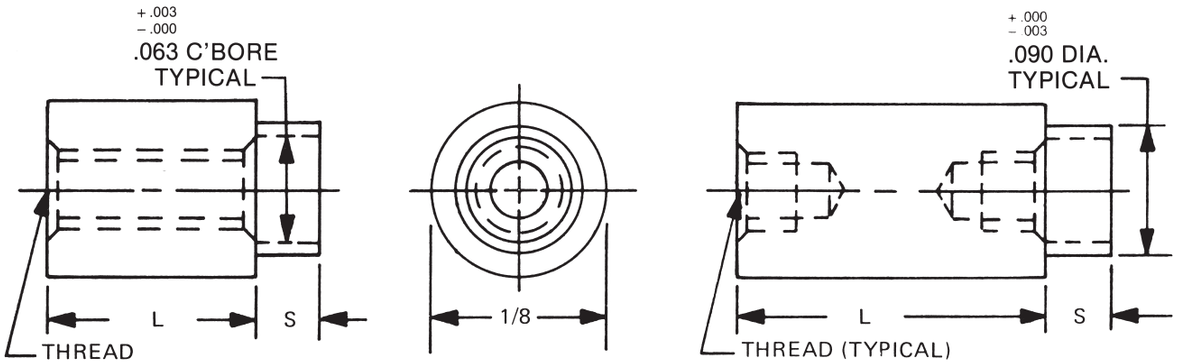

L = STANDOFF LENGTH
S = SHANK LENGTH
P = BOARD THICKNESS

See page iv for installation information

See page 10 for thread depth chart
See page 9 for finish codes
For non-standard parts contact Sales Office

ORDERING CODE

XXXX or XXXXX — LENGTH
X — SHANK
XXX — THREAD
X — MATERIAL
X — FINISH

SWAGE TOOLING		
PUNCH	ANVIL	LENGTH
P-1	AR-10	3/32-3/16
	AR-11	7/32-7/16
	AR-12	15/32-11/16
	AR-13	23/32-1"

SWAGE/PANEL CODE		
±.003	S	P
.075	A	1/32
.105	B	1/16
.135	C	3/32
.165	D	1/8
.230	E	3/16
.290	F	1/4

LENGTH	PART NO.
3/32	**3000A**
1/8	**3000**
5/32	**3000T**
3/16	**3001**
7/32	**3001T**
1/4	**3002**
9/32	**3002T**
5/16	**3003**
11/32	**3003T**
3/8	**3004**
13/32	**3004T**
7/16	**3005**
15/32	**3005T**
1/2	**3006**
17/32	**3006T**

LENGTH	PART NO.
9/16	**3007**
19/32	**3007T**
5/8	**3008**
21/32	**3008T**
11/16	**3009**
23/32	**3009T**
3/4	**3010**
25/32	**3010T**
13/16	**3011**
27/32	**3011T**
7/8	**3012**
29/32	**3012T**
15/16	**3013**
31/32	**3013T**
1"	**3014**

THREAD	CODE
0-80	080

MATERIAL	CODE	RoHS
Aluminum	AL	YES
Brass	B	YES
Stainless Steel	SS	YES
Steel	S	YES

RAF ELECTRONIC HARDWARE
95 Silvermine Road, Seymour, Ct. 06483 Phone: 203-888-2133 Fax: 203-888-9860
e-mail : info@rafhdwe.com Web: www.rafhdwe.com