ITEM NO.	PART NUMBER	DESCRIPTION	QTY.	COMPONENT NOTES
1	TLY-13	NEMA 5-15P	1	PVC, black
2	TLY-18	C13 female	1	PVC, black
3	30-01362	Wire, 3C, 14 AWG, UL SJT, 300V, 105C, 9.25 mm, VW-1, PVC	1	
4	Ac label	White with black text: "15A 125V AC"	1	

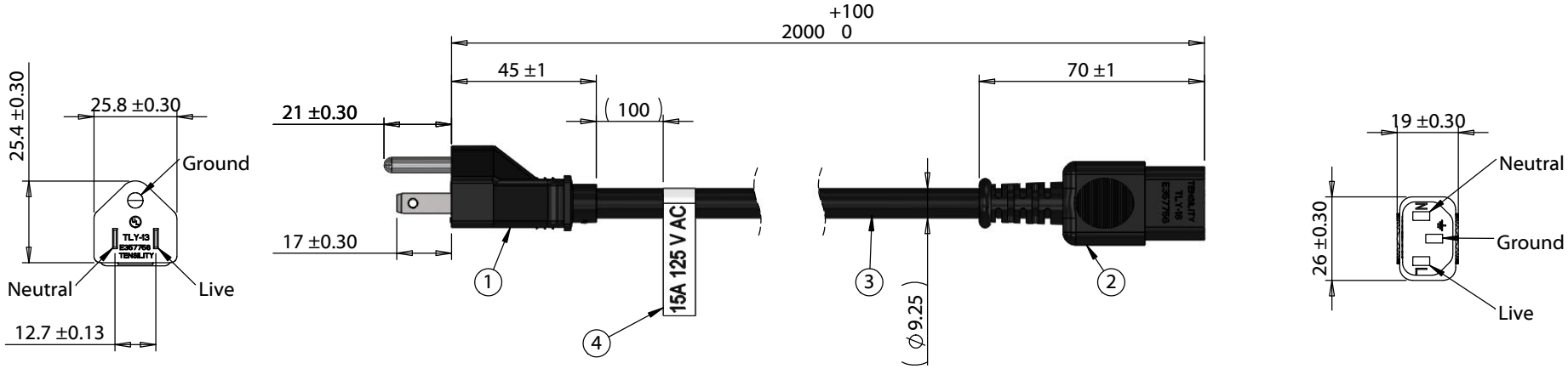

Wiring Diagram		
TLY-13	wire color	TLY-18
Live	black	Live
Neutral	white	Neutral
Ground	green	Ground

Notes:
Cable rated for 15 A, 125 Vac

Revision:	Date:	Description:
A	5/19/2020	Initial release

Prepared: AG — Digitally signed by AG Date: 2020.05.19 12:02:58 -07'00'

Verified: AW — Digitally signed by AW Date: 2020.05.20 10:34:36 -07'00'

Dimensions are in millimeters.
Tolerances:
X: ± 0.5 mm
X.X: ± 0.3 mm
X.XX: ± 0.05 mm

Notes:

RoHS compliant

Function test: no open, no short circuit, no intermittent

Description:

Ac cord, 2000 mm, U.S., Nema 5-15P plug, TLY-13 to C13, 14 AWG, SJT wire, 30-01363

TENSILITY
tel 1.541.323.3228 800 877.670.7118
fax 1.541.323.4202 web tensility.com

Size: A
Part number: 11-00127
Scale: 1:2
Sheet 1 of 1

5 4 3 2 1

To see a custom version of this cable assembly, call Tensility at 541-323-3228 or email engineering@tensility.com