Part Number: 0495050206
Status: Active
Overview: Automotive Bulb Sockets
Description: Wedge Bulb Socket, Single Housing Assembly, W16W, Unsealed, Gray

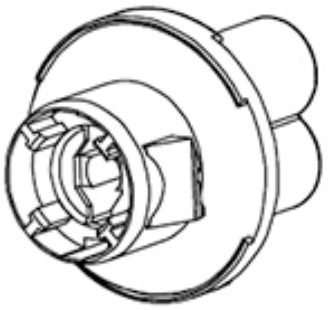

Series image - Reference only

Documents:
Drawing (PDF)
Product Specification PS-49505-001-001 (PDF)
Packaging Specification PK-49505-002-001 (PDF)
RoHS Certificate of Compliance (PDF)

General

Product Family	Other Sockets
Series	49505
Comments	Unsealed bulb socket for W16W, Unsealed bulb socket for W16W
Component Type	Socket
Overview	Automotive Bulb Sockets
Product Name	Wedge Bulb Socket
UPC	822348652396

Physical

Circuits (Loaded)	2
Circuits (maximum)	2
Color - Resin	White
Durability (mating cycles max)	Contact Molex
Entry Angle	Vertical
Keying to Mating Part	None
Material - Resin	Nylon
Net Weight	5.186/g
PCB Locator	No
PCB Retention	N/A
Packaging Type	Bag
Pitch - Mating Interface	N/A
Temperature Range - Operating	-40° to +85°C
Termination Interface: Style	Through Hole

Electrical

Current - Maximum per Contact	7.0A
Voltage - Maximum	12V

Material Info

Reference - Drawing Numbers

Packaging Specification	PK-49505-002-001
Product Specification	PS-49505-001-001
Sales Drawing	SD-49505-001

EU ELV
Compliant

EU RoHS
Compliant

China RoHS

REACH SVHC
Not Contained Per - ED/71/2019 (16 July 2019)

Halogen-Free Status
Not Relevant

For more information, please visit Contact US

China ROHS	Not Relevant
ELV	Compliant
RoHS Phthalates	Not Contained

Search Parts in this Series
49505 Series

Mates With
Wedge Base Bulb

Use With
Wedge Terminal 354779002