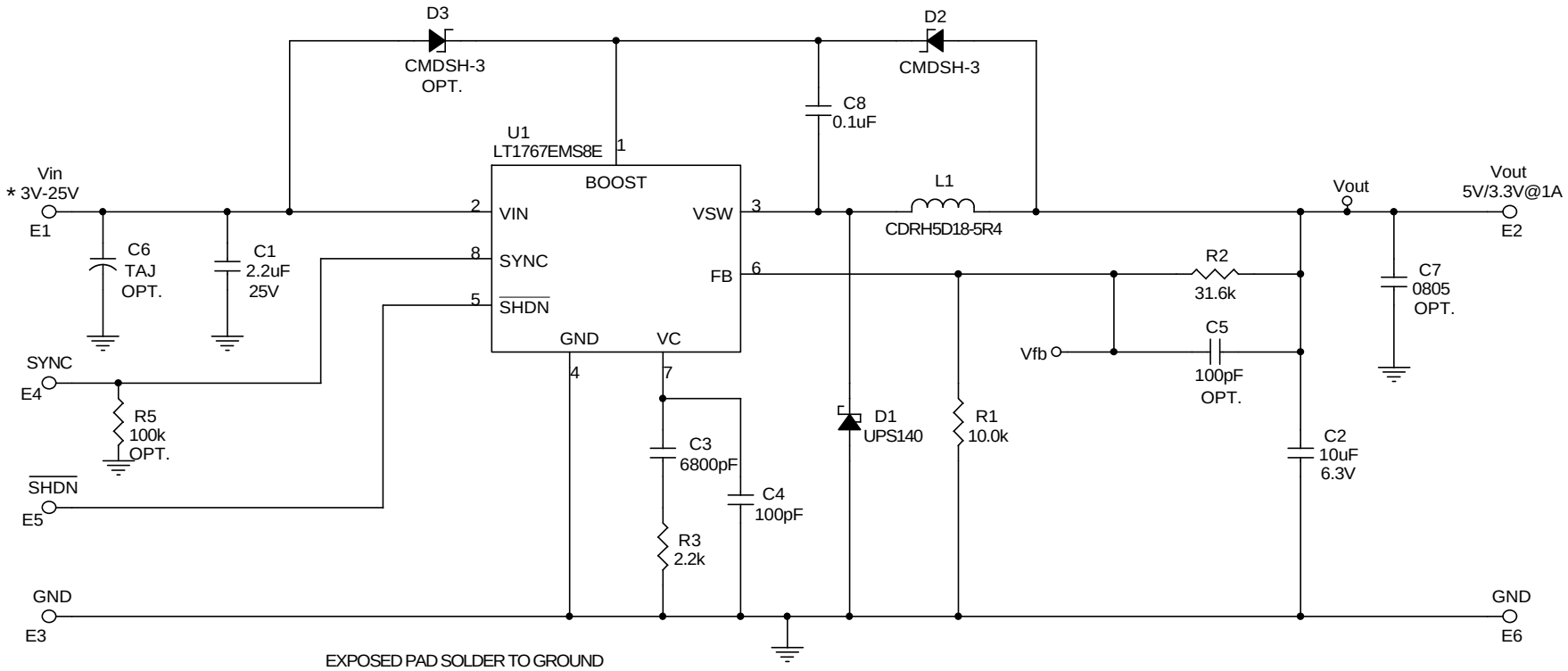

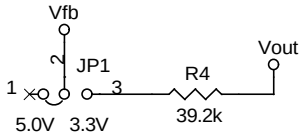

* VIN MINIMUM	VOUT
6.6	5
4.5	3.3
3.5	2.5
3	1.8

See Quick-Start Guide.

CONTRACT NO.		
APPROVALS		DATE
DRAWN	June Wu	2/12/02
CHECKED		
APPROVED		
ENGINEER	Keith S.	2/12/02
DESIGNER		
Tuesday, August 06, 2002		

LINEAR TECHNOLOGY
1630 McCarthy Blvd.
Milpitas, CA 95035
Phone: (408)432-1900
Fax: (408)434-0507

TITLE

LT1767EMS8E, 1.25MHz Wide Input Range Step Down DC/DC Converter

SIZE	CAGE CODE	DWG NO	REV
		DC502A	A

SCALE:	FILENAME:	SHEET 1 OF 1