Engineering/Process Change Notice

ECN/PCN No.: 4147

For Manufacturer			
Product Description: PLASTIC SMD MEMS OSCILLATOR	**Abracon Part Number / Part Series:** EMRB85	☐ Documentation only ☐ ECN ☒ EOL	☒ Series ☐ Part Number
Affected Revision: B	**New Revision:** EOL	**Application:**	☐ Safety ☒ Non-Safety
Prior to Change: Active https://abracon.com/datasheets/Ecliptek/EMRB85.pdf			
After Change: EOL			
Cause/Reason for Change: Discontinuation of manufacturing capability.			

Change Plan		
Effective Date: 2/7/2022	**Additional Remarks:** N/A	
Change Declaration: N/A		
Issued Date: 2/7/2022	**Issued By:**	**Issued Department:**
Approval:	**Approval:**	**Approval:**

For Abracon EOL only		
Last Time Buy (if applicable): 5/7/2022	**Alternate Part Number / Part Series:** none	
Additional Approval:	**Additional Approval:**	**Additional Approval:**

Customer Approval (If Applicable)		
Qualification Status: ☐ Approved ☐ Not accepted *Note: It is considered approved if there is no feedback from the customer 1 month after ECN/PCN is released.*		
Customer Part Number:	**Customer Project:**	
Company Name:	**Company Representative:**	**Representative Signature:**
Customer Remarks:		

REGULATORY COMPLIANCE

Lead Free COMPLIANT | EU RoHS 2011/65 + 2015/863 COMPLIANT | China RoHS COMPLIANT | REACH SVHC COMPLIANT | DRC CONFLICT FREE

ITEM DESCRIPTION

MEMS Clock Oscillators LVCMOS (CMOS) 3.0Vdc 4 Pad 0.8mm x 1.5mm Chip Scale Package (CSP)

ELECTRICAL SPECIFICATIONS

Nominal Frequency	32.768kHz
Frequency Tolerance/Stability	Inclusive of all conditions: Calibration Tolerance at 25°C, Frequency Stability over the Operating Temperature Range, Supply Voltage Change, and Output Load Change ±75ppm Maximum over -10°C to +70°C ±100ppm Maximum over -40°C to +85°C
Frequency Tolerance	Measured at 25°C ±2°C, at Vdd=3.0Vdc, Post Reflow, with board level underfill ±20ppm Maximum
Aging at 25°C	±1ppm Maximum First Year
Supply Voltage	3.0Vdc ±10%
Core Operating Current	0.9µA Typical (at 25°C), 1.4µA Maximum at Frequency Tolerance/Stability of ±100ppm Maximum over -40°C to +85°C 0.9µA Typical (at 25°C), 1.3µA Maximum at Frequency Tolerance/Stability of ±75ppm Maximum over -10°C to +70°C
Output Stage Operating Current	0.065µA/Vpp Typical, 0.125µA/Vpp Maximum
Input Current	No Load, Nominal Vdd 1.1µA Typical (at 25°C), 1.9µA Maximum at Frequency Tolerance/Stability of ±100ppm Maximum over -40°C to +85°C 1.1µA Typical (at 25°C), 1.7µA Maximum at Frequency Tolerance/Stability of ±75ppm Maximum over -10°C to +70°C
Output Voltage Logic High (V_{Oh})	IOH = -10µA 90% of Vdd Minimum
Output Voltage Logic Low (V_{Ol})	IOL = +10µA 10% of Vdd Maximum
Rise/Fall Time	Measured from 10% to 90% of waveform 100nSec Typical, 200nSec Maximum
Duty Cycle	Measured at 50% of waveform 50 ±2(%)
Load Drive Capability	15pF Maximum
Output Logic Type	CMOS
Period Jitter (RMS)	Measured at 25°C 35nSec Typical
Power Supply Ramp	Measured at 0Vdc to 90% of Vdd 100mSec Maximum
Start Up Time	Measured at Nominal Vdd 180mSec Typical, 300mSec Maximum (at 25°C) 450mSec Maximum (over Operating Temperature Range)
Storage Temperature Range	-55°C to +125°C

PART NUMBERING GUIDE

EMRB85 B -32.768K TR

Series
MEMS Clock Oscillators LVCMOS (CMOS) 3.0Vdc 4 Pad 0.8mm x 1.5mm Chip Scale Package (CSP)

Frequency Tolerance/Stability
B = ±75ppm Maximum over -10°C to +70°C
C = ±100ppm Maximum over -40°C to +85°C

Nominal Frequency

Packaging Options
Blank = Bulk (Cut Tape)
TR = Tape & Reel

MECHANICAL DIMENSIONS

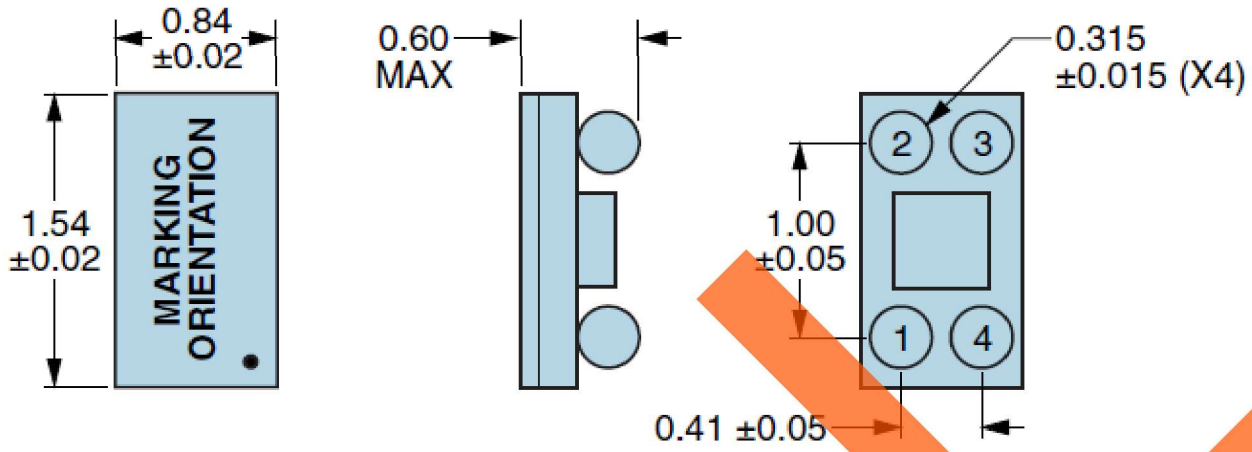

SUGGESTED SOLDER PAD LAYOUT

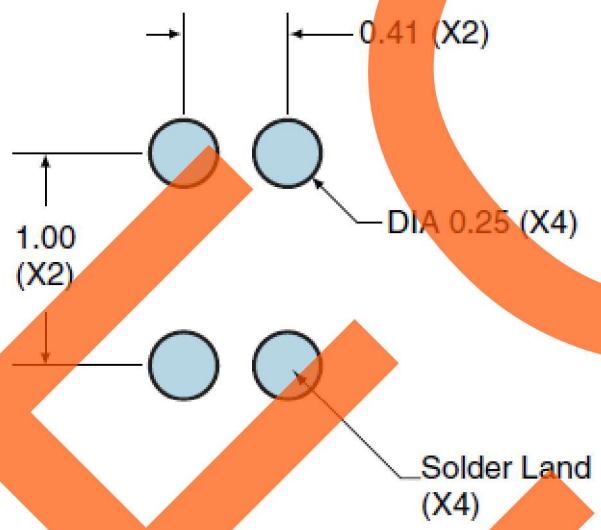

PIN	CONNECTION
1	Ground
2	Output
3	Supply Voltage
4	Ground

All Tolerances are ±0.1

All Dimensions in Millimeters

OUTPUT WAVEFORM & TIMING DIAGRAM

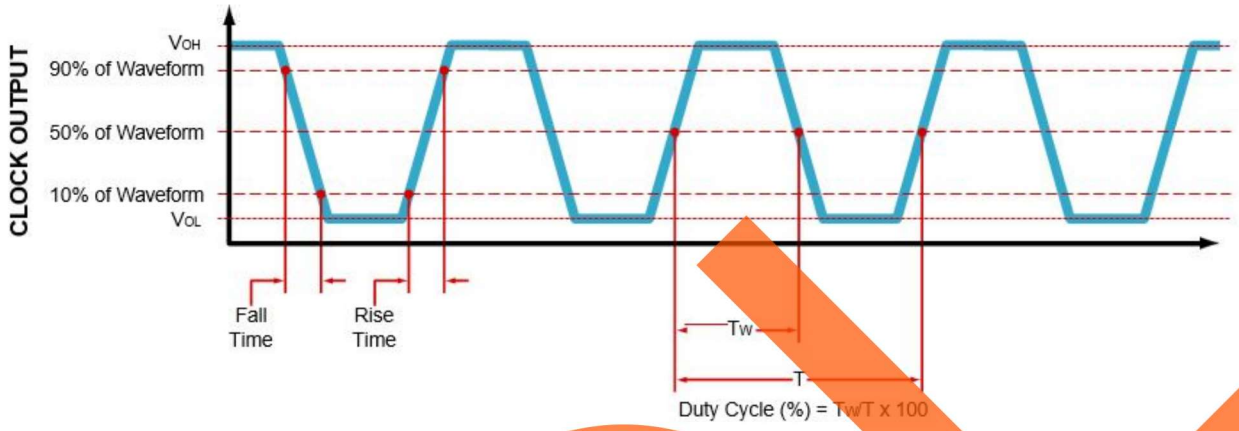

TEST CIRCUIT FOR CMOS OUTPUT

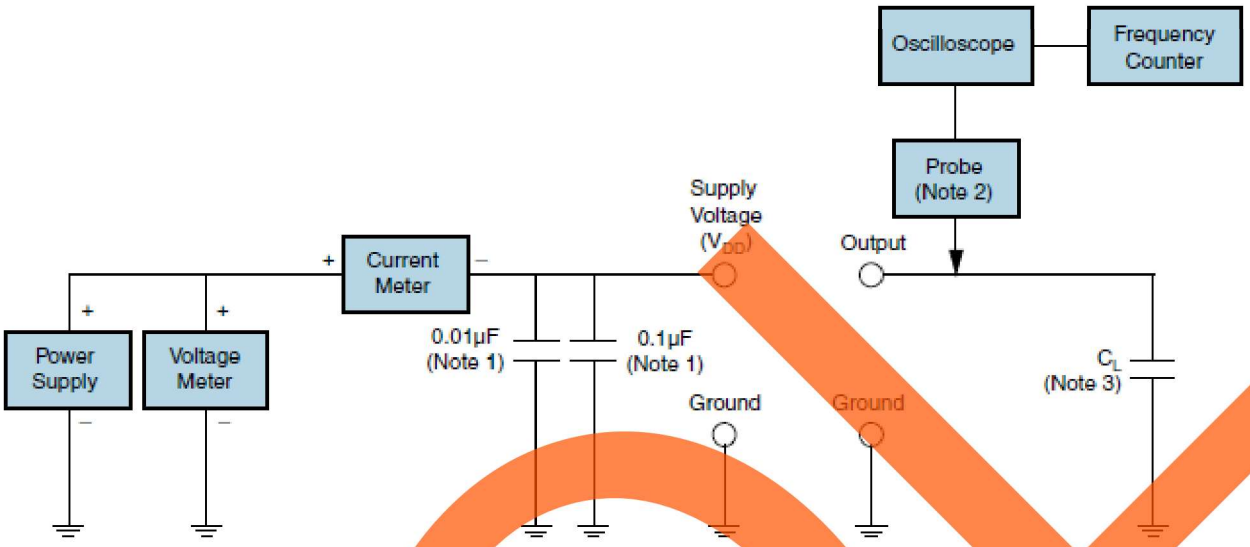

Note 1: An external 0.01µF ceramic bypass capacitor in parallel with a 0.1µF high frequency ceramic bypass capacitor close (less Than 2mm) to the package ground and supply voltage pin is required.
Note 2: A low input capacitance (<12pF), 10X attentuation factor, high impedance (>10Mohms), and high bandwidth (>300MHz) Passive probe is recommended.
Note 3: Capacitance value CL includes sum of all probe and fixture capacitance. See applicable specification sheet for 'Load Drive Capability'.

TAPE & REEL DIMENSIONS

Quantity per Reel: 3000 Units

All Dimensions in Millimeters

Compliant to EIA-481

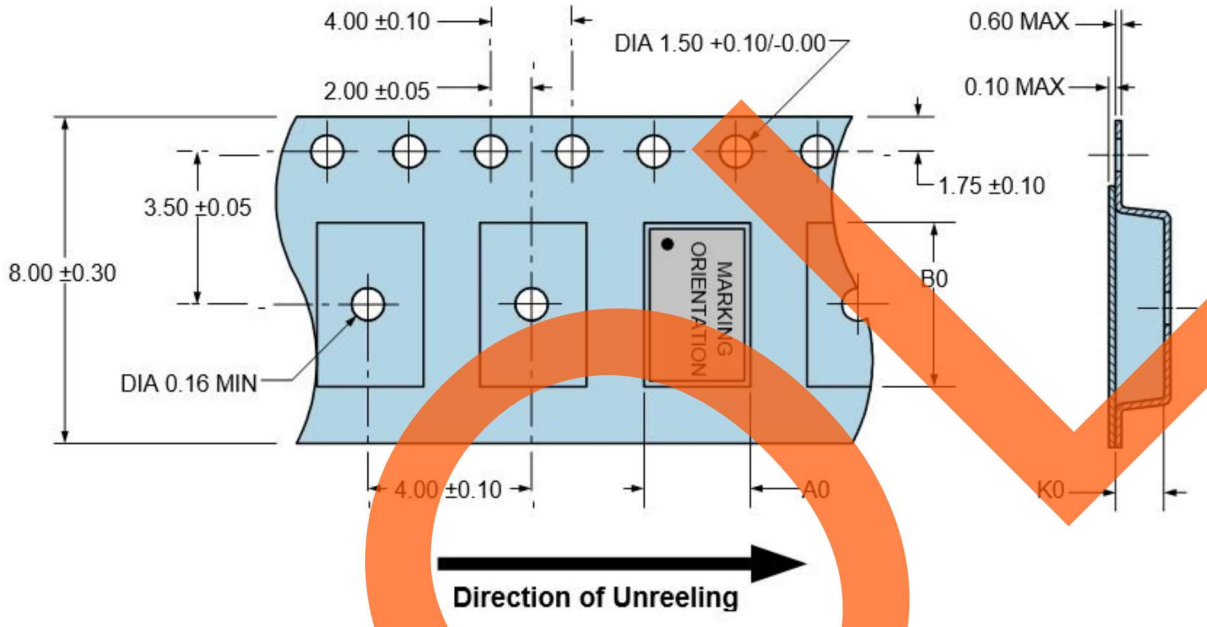

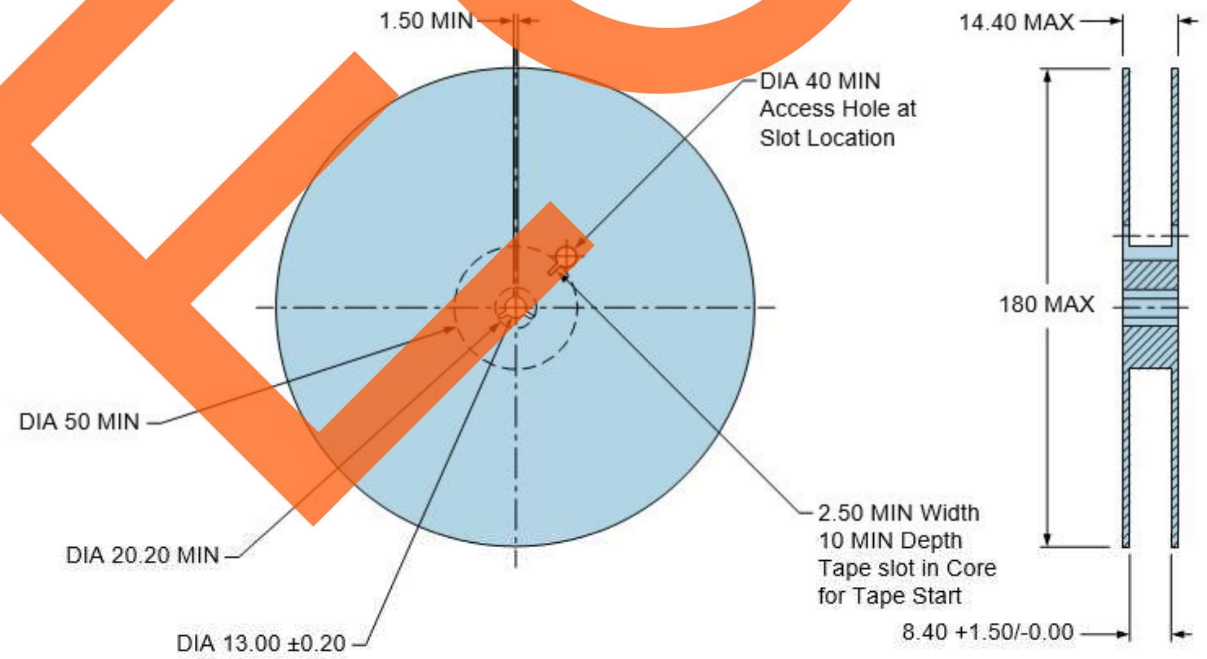

RECOMMENDED SOLDER REFLOW METHOD

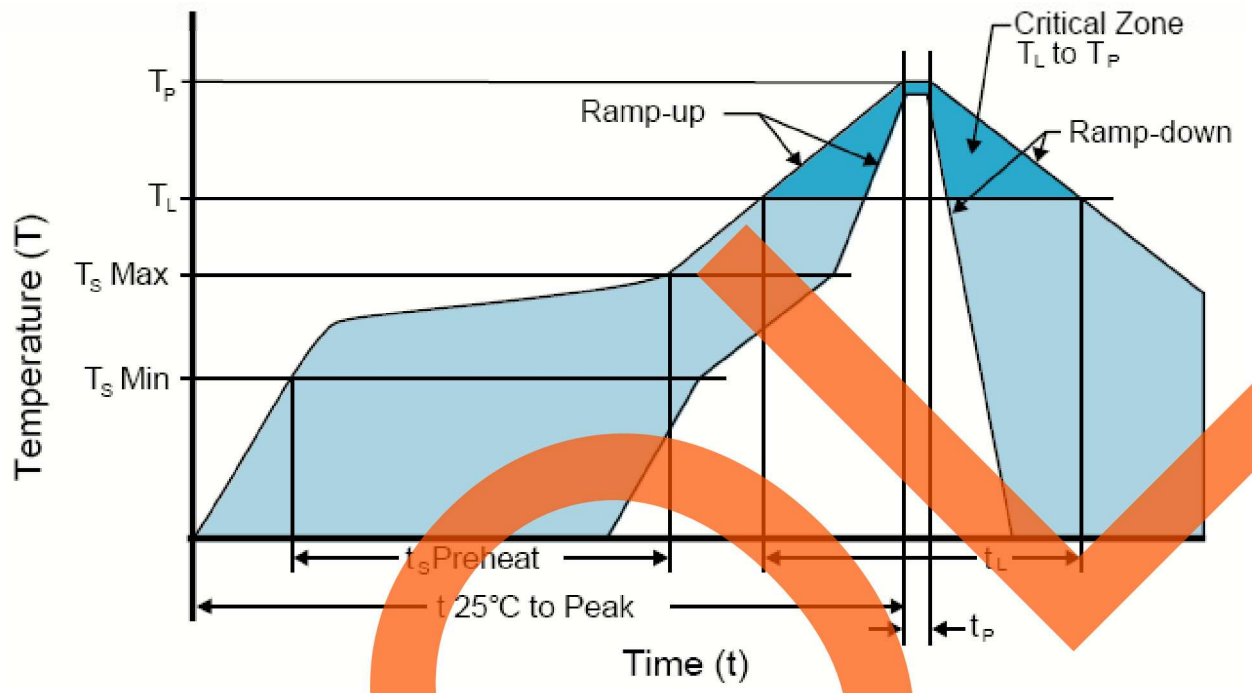

HIGH TEMPERATURE INFRARED/CONVECTION	
T_S MAX to T_L (Ramp-up Rate)	3°C/Second Maximum
Preheat **- Temperature Minimum (T_S MIN)** **- Temperature Typical (T_S TYP)** **- Temperature Maximum(T_S MAX)** **- Time (t_S)**	 150°C 175°C 200°C 60 - 180 Seconds
Ramp-up Rate (T_L to T_P)	3°C/Second Maximum
Time Maintained Above: **- Temperature (T_L)** **- Time (t_L)**	 217°C 60 - 150 Seconds
Peak Temperature (T_P)	260°C Maximum for 10 Seconds Maximum
Target Peak Temperature(T_P Target)	250°C +0/-5°C
Time within 5°C of actual peak (t_p)	20 - 40 Seconds
Ramp-down Rate	6°C/Second Maximum
Time 25°C to Peak Temperature (t)	8 Minutes Maximum
Moisture Sensitivity Level	Level 1
Additional Notes	Temperatures shown are applied to body of device.

High Temperature Manual Soldering

260°C Maximum for 5 Seconds Maximum, 2 times Maximum. (Temperatures shown are applied to body of device.)

RECOMMENDED SOLDER REFLOW METHOD

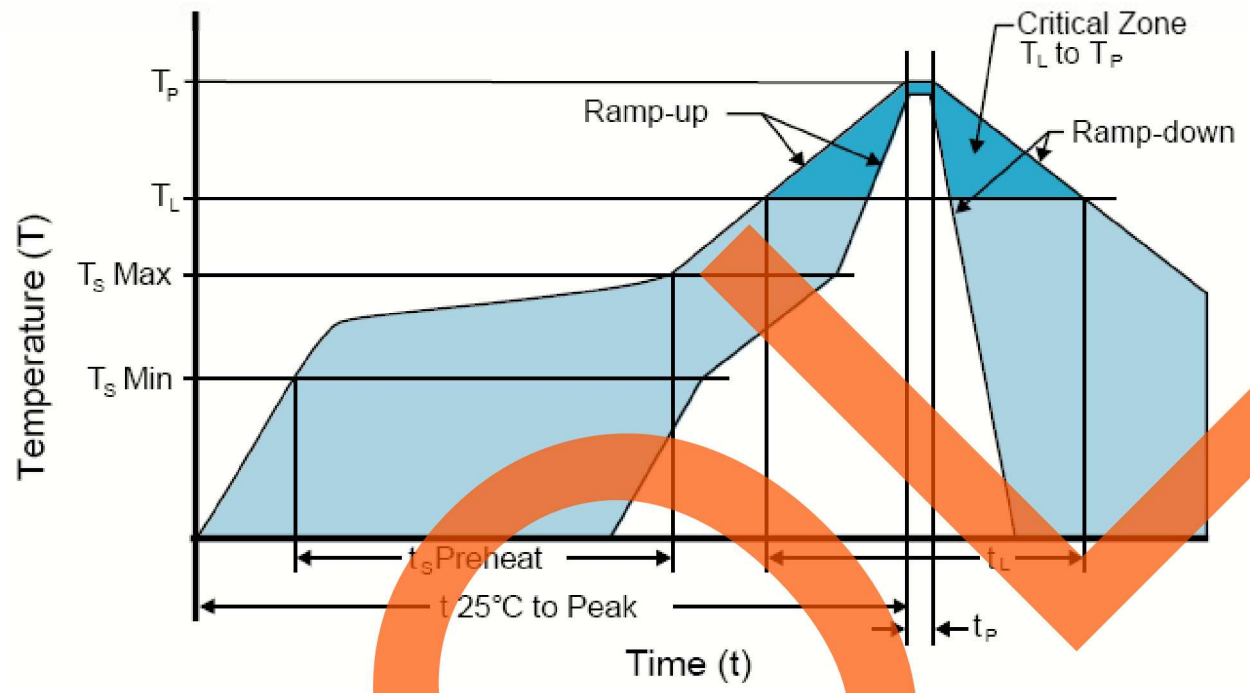

LOW TEMPERATURE INFRARED/CONVECTION	
T_S MAX to T_L (Ramp-up Rate)	5°C/Second Maximum
Preheat **- Temperature Minimum (T_s MIN)** **- Temperature Typical (T_s TYP)** **- Temperature Maximum(T_s MAX)** **- Time (t_s)**	 N/A 150°C N/A 60 - 120 Seconds
Ramp-up Rate (T_L to T_P)	5°C/Second Maximum
Time Maintained Above: **- Temperature (T_L)** **- Time (t_L)**	 150°C 200 Seconds Maximum
Peak Temperature (T_P)	240°C Maximum
Target Peak Temperature (T_P Target)	240°C Maximum 2 Times / 230˚C Maximum 1 Time
Time within 5°C of actual peak (t_p)	10 Seconds Maximum 2 Times / 80 Seconds Maximum 1 Time
Ramp-down Rate	5°C/Second Maximum
Time 25°C to Peak Temperature (t)	N/A
Moisture Sensitivity Level	Level 1
Additional Notes	Temperatures shown are applied to body of device.

Low Temperature Manual Soldering

185°C Maximum for 10 Seconds Maximum, 2 times Maximum. (Temperatures shown are applied to body of device.)