外觀圖

文件資料管理
禁止翻印外洩 · All rights reserved

OAD-00005893

FSP850-50FGPH3

Released Date:2019/12/13-09:09:06

文件資料管制 文件資料管制 文件資料管制 All rights reserved

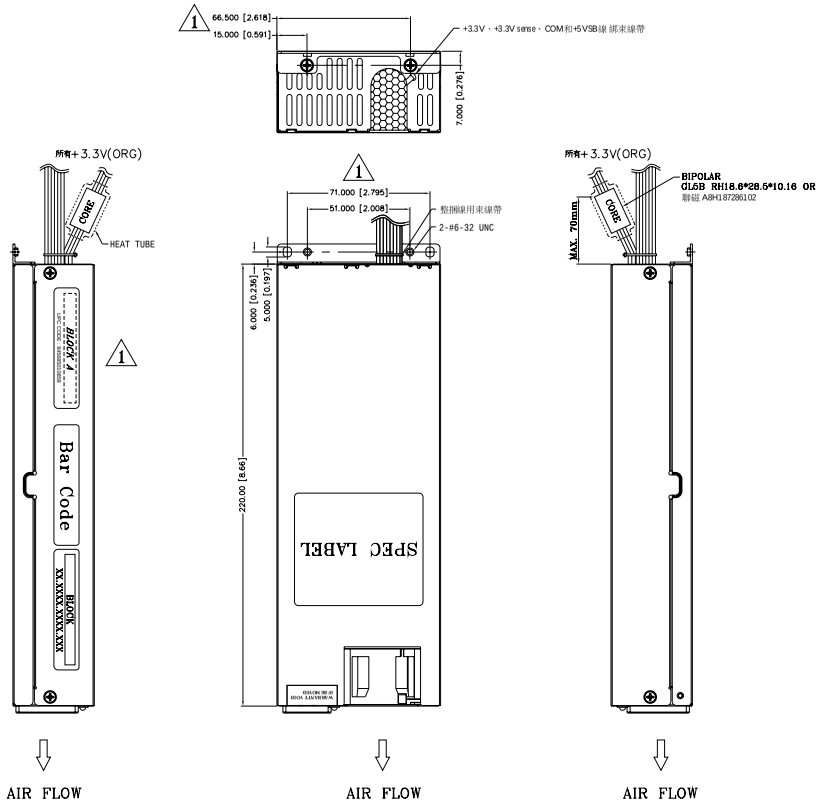

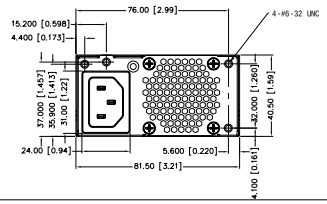

REF. ID.	PIN NO.	RATING	WIRE COLOR	WIRE TYPE	CONNECTOR TYPE	CABLE LENGTH
P1	1	+3.3V	ORANGE	UL1007 20 AWG	WST P20-I42002K11D + P4-I42002K11D or EQUIV.	350±15 mm
	2	+3.3V	ORANGE	UL1007 20 AWG		
	3	COM	BLACK	UL1007 20 AWG		
	4	+5V	RED	UL1007 20 AWG		
	5	COM	BLACK	UL1007 20 AWG		
	6	+5V	RED	UL1007 20 AWG		
	7	COM	BLACK	UL1007 20 AWG		
	8	PW_OK	GRAY	UL1007 22 AWG		
	9	+5VSB	PURPLE	UL1007 20 AWG		
	10	+12V	YELLOW	UL1007 20 AWG		
	11	+12V	YELLOW	UL1007 20 AWG		
	12	+3.3V	ORANGE	UL1007 20 AWG		
	13	+3.3V	ORANGE	UL1007 20 AWG		
		+3.3V sense	BROWN	UL1007 22 AWG		
	14	-12V	BLUE	UL1007 22 AWG		
	15	COM	BLACK	UL1007 20 AWG		
	16	PS_ON#	GREEN	UL1007 22 AWG		
	17	COM	BLACK	UL1007 20 AWG		
	18	COM	BLACK	UL1007 20 AWG		
	19	COM	BLACK	UL1007 20 AWG		
	20					
	21	+5V	RED	UL1007 20 AWG		
	22	+5V	RED	UL1007 20 AWG		
	23	+5V	RED	UL1007 20 AWG		
	24	COM	BLACK	UL1007 20 AWG		
P2	1	COM	BLACK	UL1007 20 AWG	MOLEX 39-01-2080 or EQUIV.	350±15 mm
	2	COM	BLACK	UL1007 20 AWG		
	3	COM	BLACK	UL1007 20 AWG		
	4	COM	BLACK	UL1007 20 AWG		
	5	+12V	YELLOW	UL1007 20 AWG		
	6	+12V	YELLOW	UL1007 20 AWG		
	7	+12V	YELLOW	UL1007 20 AWG		
	8	+12V	YELLOW	UL1007 20 AWG		
P3	1				MOLEX 39-01-2040 or EQUIV.	155±10 mm
	2					
	3	+12V	YELLOW	UL1007 20 AWG		
	4	+12V	YELLOW	UL1007 20 AWG		
P4	1	+12V	YELLOW	UL1007 20 AWG	MOLEX P8-I42002K21B-B or EQUIV. (BLACK)	350±15 mm
	2	+12V	YELLOW	UL1007 20 AWG		
	3	+12V	YELLOW	UL1007 20 AWG		
	4	COM	BLACK	UL1007 20 AWG		
	5	COM	BLACK	UL1007 20 AWG		
	6	COM	BLACK	UL1007 20 AWG		
	7	COM	BLACK	UL1007 20 AWG		
	8	COM	BLACK	UL1007 20 AWG		
P5	1	+12V	YELLOW	UL1007 20 AWG	MOLEX P8-I42002K21B-B or EQUIV. (BLACK)	155±10 mm
	2	+12V	YELLOW	UL1007 20 AWG		
	3	+12V	YELLOW	UL1007 20 AWG		
	4	COM	BLACK	UL1007 20 AWG		
	5	COM	BLACK	UL1007 20 AWG		
	6	COM	BLACK	UL1007 20 AWG		
	7	COM	BLACK	UL1007 20 AWG		
	8	COM	BLACK	UL1007 20 AWG		
P6	1	+12V	YELLOW	UL1007 20 AWG	WST P4-A10202 or EQUIV.	350±15 mm
	2	COM	BLACK	UL1007 20 AWG		
	3	COM	BLACK	UL1007 20 AWG		
	4	+5V	RED	UL1007 20 AWG		
P7	1	+12V	YELLOW	UL1007 20 AWG	WST P4-A10202 or EQUIV.	155±10 mm
	2	COM	BLACK	UL1007 20 AWG		
	3	COM	BLACK	UL1007 20 AWG		
	4	+5V	RED	UL1007 20 AWG		
1 P8 P10	1	+3.3V	ORANGE	UL1007 20 AWG	MOLEX SD-67926-0311 or EQUIV.	155±10 mm
	2	COM	BLACK	UL1007 20 AWG		
	3	+5V	RED	UL1007 20 AWG		
	4	COM	BLACK	UL1007 20 AWG		
	5	+12V	YELLOW	UL1007 20 AWG		
1 P9 P11	1	+3.3V	ORANGE	UL1007 20 AWG	MOLEX SD-67582-001 or EQUIV.	350±15 mm
	2	COM	BLACK	UL1007 20 AWG		
	3	+5V	RED	UL1007 20 AWG		
	4	COM	BLACK	UL1007 20 AWG		
	5	+12V	YELLOW	UL1007 20 AWG		
P12	1	SCL	BLUE	UL1007 24 AWG	MOLEX 50-57-9405 or EQUIV.	350±15 mm
	2	SDA	PURPLE	UL1007 24 AWG		
	3	PSALERT	GREEN	UL1007 24 AWG		
	4	COM	BLACK	UL1007 24 AWG		
	5					

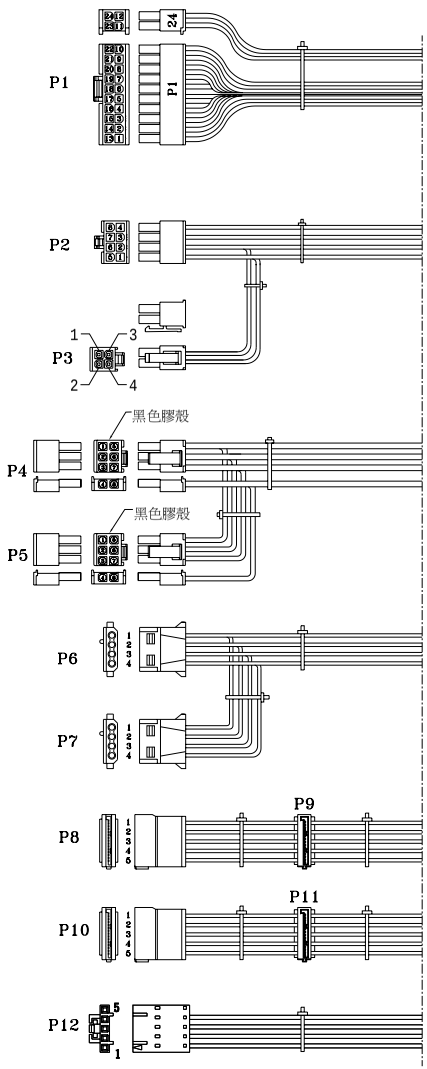

序號	修改版次	修改事項	備註
1	1	增加50A0078201GP支架	
2	1	修改P8,P9,P10,P11線材尺寸.	
3	1	增加UPC CODE	

NOTE:
1. ALL THE LENGTH OF OUTPUT WIRES EXCLUDE HOUSING.
2. 產地標籤依業務指示加貼.
   (Label of origin is marked if indicated by sales.)
3. 公差: .XX=±0.5 [0.02]、.XXX=±0.25 [0.01].

UNIT:mm [inch]

P/N.: 9PA8503404

MODEL NO. : FSP850-50FGPH3		TITLE: ASSY	SHEET: 1 OF 1	REV:01
R&D(2)	PE	DRAWN	DATE	
		Patty	2019-12-13	
INTERIOR COUNTERSIGN:				

建立時間:2019-12-13 17:09:06
OAD-00005893-R01.pdf
1/1禁止翻印外洩 All rights reserved