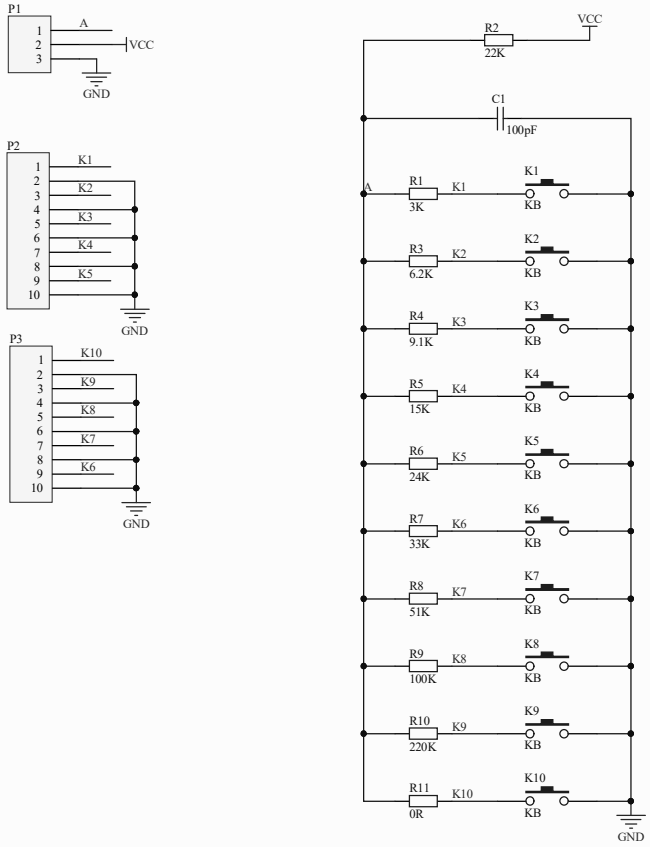

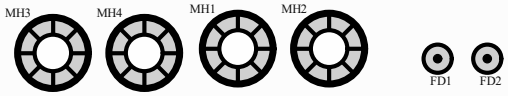

DFROBOT	Title: *ADKey Board-10 Keys*		Code: *DFR0792*
	Drawn: *Aaron-CD*	Revision: *V1.0*	Size: *A3*
	Page: *1 of 1*	Date: *2021/2/20*	Time: *16:09:16*