# 規格書
# SPECIFICATION

| | |
|---|---|
| 品名<br>STYLE NAME： | SWITCHING POWER SUPPLY |
| 型號<br>MODEL NO.： | H1U-5300V |
| 料號<br>PART NO.： | |
| 版次<br>REVISION： | A2 |

| | | | |
|---|---|---|---|
| APPROVE<br>核准 | 黃承松 Feb.13,2009 | 正式資料用章 | 正式資料<br>FEB 13 2009<br>研發本部 |
| CHECK BY<br>審核 | 宋國全 FEB13'2009 | | |
| FORM MAKER<br>經辦 | 陳品文 FEB.13.2009 | | |

新巨企業股份有限公司
電源事業處
ZIPPY TECHNOLOGY CORP.
POWER DIVISION

10F,NO.50 MIN CHYUAN RD.,
SHIN-TIEN CITY,TAIPEI HSIEN,
TAIWAN,R.O.C.
TEL.：+886(2)29188512
FAX.：+886(2)29134969

# Revisions

| Rev. | Page | Item | Date | Description |
|---|---|---|---|---|
| A2 | 10 | 11.0 | FEB.13.2009 | ADD Fan speed control voltage |

# MODEL NO. H1U-5300V

1.0 Scope

This specification defines the performance characteristics of a grounded，single-phase，300watts，5 output level power supply. This specification also defines world wide safety requirements and manufactures process test requirements.

2.0 Input requirements

2.1 Voltage (sinusoidal)

Full range 100～240 VAC (With ± 10% tolerance)

2.2 Frequency

The input frequency range will be 47hz～63hz.

2.4 Steady-state current

4 ~ 2 amps maximum at any low/high range input voltage.

2.5 Inrush current

20/40 amps @110/220 VAC (at 25 degrees ambient cold start)

2.6 Power factor correction

PFC can reach the target of 95% @ 115V,full load, following the standard of EN 61000-3-2.

3.0 Output requirements

3.1 DC load requirements

| Normal Output voltage | Load current Max. | Load current Min | Regulation tolerance Max. | Regulation tolerance Min. |
|---|---|---|---|---|
| +5V | 18 | 1.0 | +5% | -5% |
| +12V | 22 | 1.0 | +5% | -5% |
| -12V | 0.5 | 0.1 | +10% | -10% |
| +3.3V | 16 | 1.0 | +5% | -5% |
| +5VSB | 2 | 0.1 | +5% | -5% |

*** +5V and +3.3V total output max : 25A ***

*** +5V,+3.3V and +12V total max:284W ***

*** Total power: 300W

Cross regulation shall include 80% max. Load & 20% max. Load any associate at any output

3.2 Regulation and protection

| Output DC voltage | Line regulation |
|---|---|
| +5V | ±50mV |
| +12V | ±100mV |
| -12V | ±120mV |
| +3.3V | ±50mV |
| +5VSB | ±50mV |

3.3 Ripple and noise

3.3.1 Specification

| | |
|---|---|
| +5V | 50mV (P-P) |
| +12V | 120mV (P-P) |
| -12V | 120mV (P-P) |
| +3.3V | 50mV (P-P) |
| +5VSB | 50mV (P-P) |

3.3.2 Ripple voltage test circuit

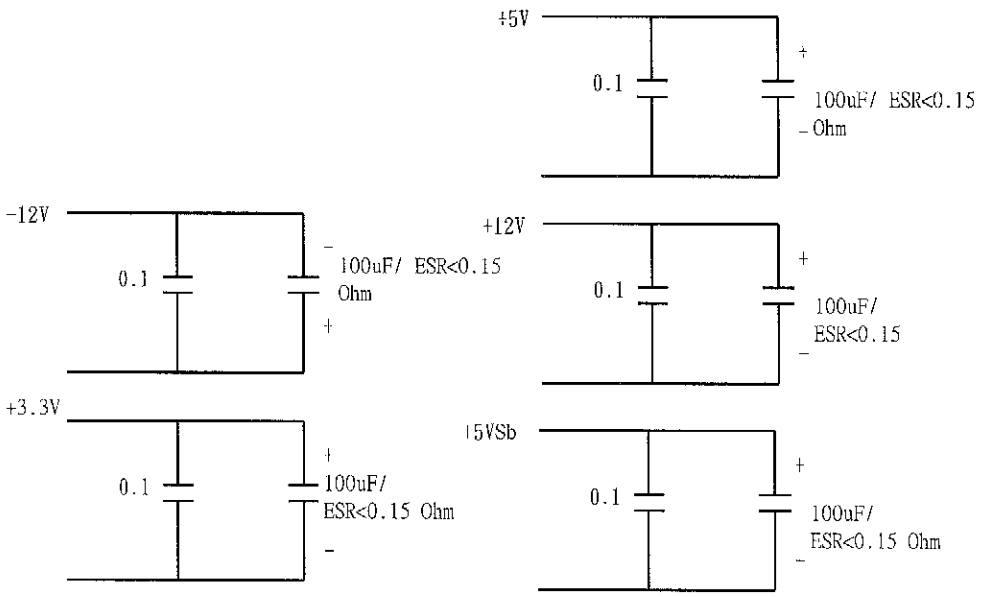


0.1uf is ceramic, the other is tantalum.
Noise bandwidth is from DC to 20Mhz

3.4 Overshoot

Any overshoot at turn on or turn off shall be less than 15% of the nominal voltage value，all output shall be within the regulation limit of section 3.2 before issuing the power good signal of section 6.0.

3.5 Efficiency

Power supply efficiency typical 80-84% at 115V FULL LOAD

3.6 Typical Distribution of Efficiency

| 20% Max load, Efficiency test condition @ Ambient temperature 30 degrees | | | | | | | |
|---|---|---|---|---|---|---|---|
| Voltage | +12V | +5V | -12V | +3.3V | +5VSB | AC INPUT Voltage | |
| | | | | | | 115V | 230V |
| Load | 3.1A | 2.6A | 0.1A | 2.3A | 0.3A | >80% | >80% |
| 50% Max load, Efficiency test condition @ Ambient temperature 30 degrees | | | | | | | |
| Voltage | +12V | +5V | -12V | +3.3V | +5VSB | AC INPUT Voltage | |
| | | | | | | 115V | 230V |
| Load | 7.8A | 6.4A | 0.2A | 5.7A | 0.7A | >82% | >84% |
| 80% Max load, Efficiency test condition @ Ambient temperature 30 degrees | | | | | | | |
| Voltage | +12V | +5V | -12V | +3.3V | +5VSB | AC INPUT Voltage | |
| | | | | | | 115V | 230V |
| Load | 12.5A | 10.2A | 0.3A | 9.1A | 1.1A | >80% | >82% |
| 100% Max load, Efficiency test condition @ Ambient temperature 30 degrees | | | | | | | |
| Voltage | +12V | +5V | -12V | +3.3V | +5VSB | AC INPUT Voltage | |
| | | | | | | 115V | 230V |
| Load | 15.6A | 12.8A | 0.4A | 11.4A | 1.4A | >80% | >82% |

P.S:
Any difference either on the DC output cable (i.e., length, wire gauge) or on the accurate of instruments will conclude different test result.

3.7 Remote on/off control

The power supply DC outputs (with the exception of +5VSB) shall be enabled with an active-low，TTL-compatible signal("PS-ON")
When PS-ON is pulled to TTL low，the DC outputs are to be enabled.
When PS-ON is pulled to TTL high or open circuited，the DC outputs are to be disabled.
The DC output enable circuit shall be SELV compliant.

4.0 Protection

4.1 Input (primary)

The input power line must have an over power protection device in accordance with safety requirement of section 8.0

4.2 Output (secondary)

4.2.1 Over power protection

Over power protection at 110%～160% of rated output power .The power supply latches all DC output into a shutdown state. Over power of this type shall cause no damage to power supply，after over power is removed and a power on/off cycle is initiated，the power supply will restart.

4.2.2 Over voltage protection

If an over voltage fault occurs (internal of the power supply)，the power supply will latch all DC output into a shutdown state before

+5V ：5.6V ～ 6.6V
+3.3V：3.8V ～ 5V
+12V ：13.2V ～ 14.6V

4.2.3 Short circuit

A: A short circuit placed on any DC output to DC return shall cause no damage.

B: The power supply shall be latched in case any short circuit is taken place at +5V, +3.3V, +12V output.

C: The power supply shall be auto-recovered in case any short circuit is taken place at -12V, +5Vsb

5.0 Power supply sequencing

5.1 Power on (see fig.1)

5.2 Hold up time

When power shutdown DC output 5V must be maintain 16msec in regulation limit at normal input voltage.

5.3 Power off sequence (see fig. 1)

6.0 Signal requirements

6.1 Power good signal (see fig. 1)

The power supply shall provide a "power good" signal to reset system logic，indicate proper operation of the power supply，and give advance warning of impending loss of regulation at turn off. This signal shall be a TTL compatible up level (2.4V to 5.25V) when +5V output voltage are present and above the minimum UV sense levels specified in paragraph 6.2，or a down level (0.0V to 0.8V) when any output is below its minimum UV sense level.

At power on，the power good signal shall have a turn on delay of at least 100ms but not greater than 500ms after the output voltages have reached their respective minimum sense levels.

6.2 Under voltage (UV) sense levels

| Output | Minimum sense voltage |
|---|---|
| +5V | +4.50V |
| +3.3V | +2.50V |

## 7.0 Environment

### 7.1 Temperature

| | |
|---|---|
| Operating temperature | 0 to 40 degrees centigrade (Evaluated for UL recognition at an operating temperature of 25°C ambient) |
| Storage temperature | -20 to 80 degrees centigrade |
| Safety regulation temperature | Applied at room temperature (25°C) |

Operating temperature from 0°C should start from AC 100V

### 7.2 Humidity

| | |
|---|---|
| Operating humidity | 20% to 80% |
| Non-operating humidity | 10% to 90% |

### 7.3 Insulation resistance

| | |
|---|---|
| Primary to secondary | : 50 meg. ohm min. 500 VDC |
| Primary to FG | : 50 meg. ohm min. 500 VDC |

### 7.4 Dielectric withstanding voltage

Condition for approval :

| | |
|---|---|
| Primary to secondary | :3K VAC for 1min. |
| Primary to FG | :1800 VAC for 1 min. |

For production purpose:100% test

| | |
|---|---|
| Primary to FG | :1800 VAC for 2 sec OR 2650 VDC for 2 sec. |

### 7.5 Leakage current

1.5 mA. max. at nominal voltage 250 VAC

## 8.0 Safety

### 8.1 Recognized to U.S. and Canadian requirements under the component recognition program of Underwriters Laboratories Inc.

The power supply shall be designed to meet UL60950.

### 8.2 TUV Standards

The power supply shall be designed to meet TUV EN-60950.

### 8.3 Power Line Transient

The power supply shall be designed to meet the following standards

a). EN 61000-4-2(ESD) Criterion B, ±4KV by contact, ±8KV by air.

b). EN 61000-4-4(EFT) Criterion B, ±1KV.

c). EN 61000-4-5(SURGE) Criterion B, Line-Line ±1KV, Line-Earth ±2KV.

### 8.4 RFI / EMI Standards

The power supply shall comply with the following radiated and conducted Emissions standards,

a). FCC part 15. (CLASS A)

b). CISPR 22. (EN 55022/CLASS A)

9.0 Reliability

9.1 Burn in

All products shipped to customer must be processed by burn-in. The burn- in shall be performed for 1 hour at full load.

10.0 Mechanical requirements

10.1 Physical dimension : 40 mm * 100 mm * 155 mm (H*W*D)

11.0 Fan speed control voltage (TC=30℃)

Fan speed is in varying with different temperature of heatsinks.
The relationship between fan noise and changes in temperature per shown in the following diagram.

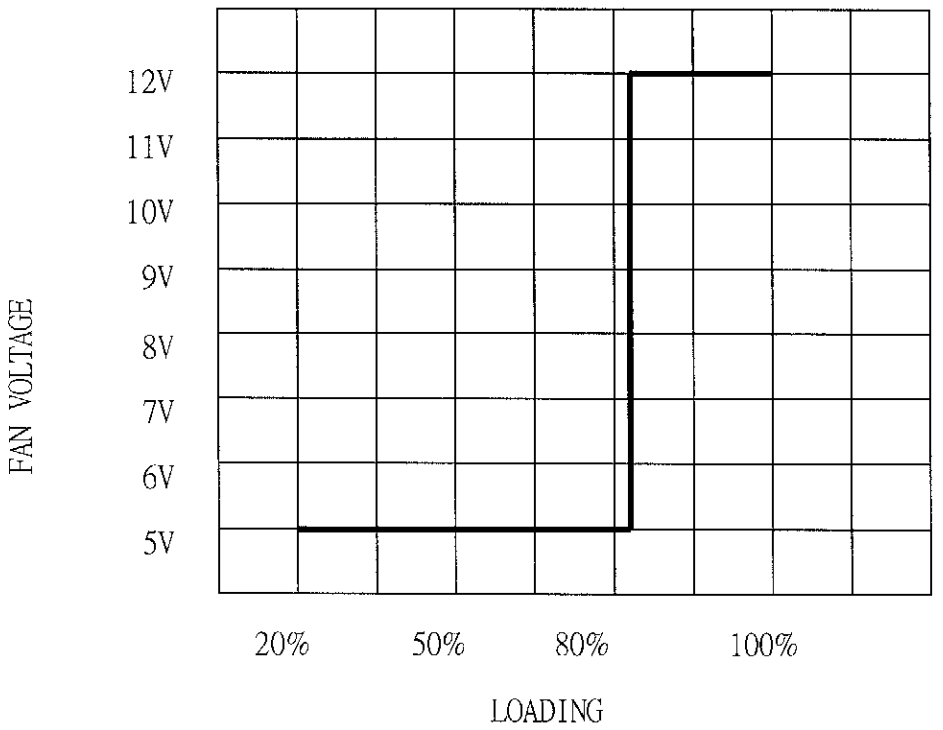

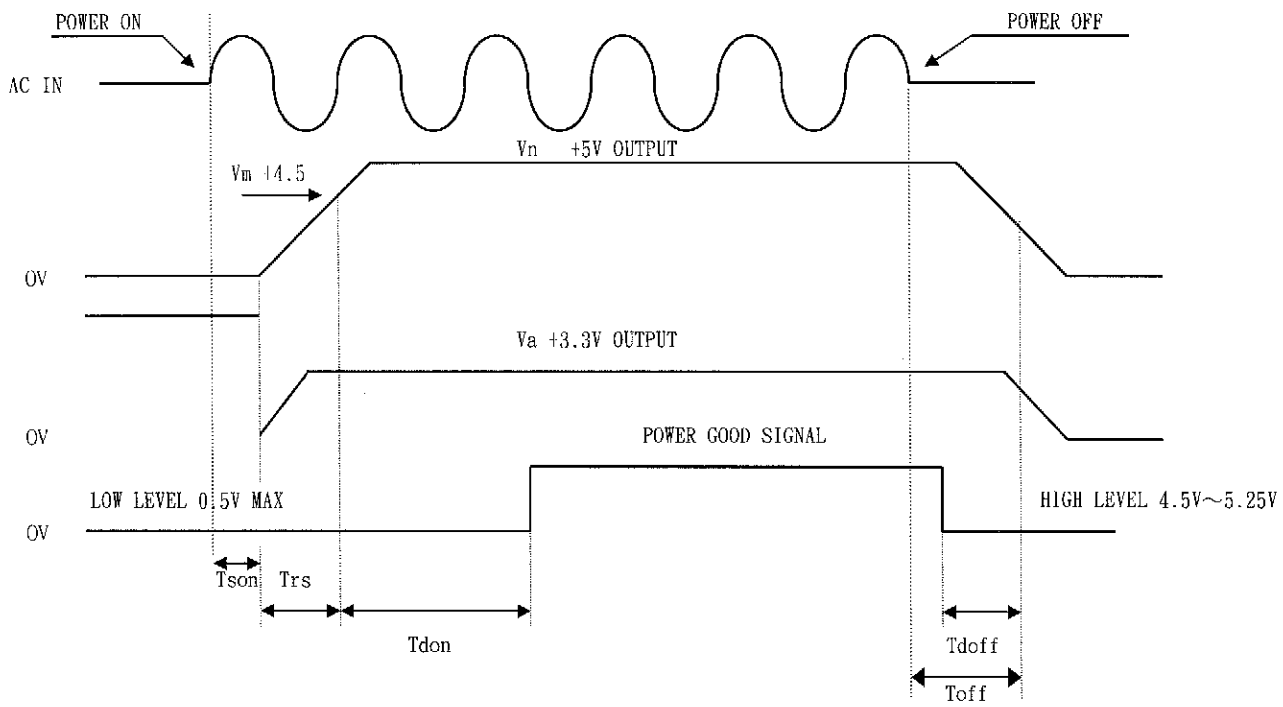


| | |
|---|---|
| Vn | Nominal voltages +5V |
| Vm | Minimum voltages +4.5V |
| Va | Nominal voltages +3.3V |
| Tson | Switch on time(500ms. Max) |
| Trs | +5V rise time (100ms. max.) |
| Tdon | Delay turn-on (100ms. < Tdon < 500ms.) |
| Tdoff | Delay turn-off (1 ms. min.) |
| Toff | Hold up time (16ms. min.) |

《Figure 1》