| 番号 No. | 部品 PART NAME | 材質 MATERIAL | 仕上げ FINISH |
|---|---|---|---|
| ① | リセプタクル　ハウジング RECEPTACLE HOUSING | 液晶ポリマー、ガラス充填、自然色（白）、UL94V-0 LIQUID CRYSTAL POLYMER, GLASS FILLED, NATURAL(WHITE), UL94V-0 | — |
| ② | リセプタクル　ターミナル RECEPTACLE TERMINAL | リン青銅 PHOSPHOR BRONZE | 1. |

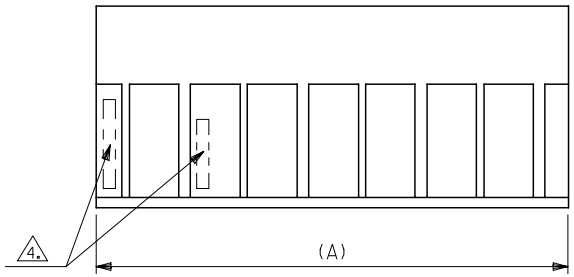


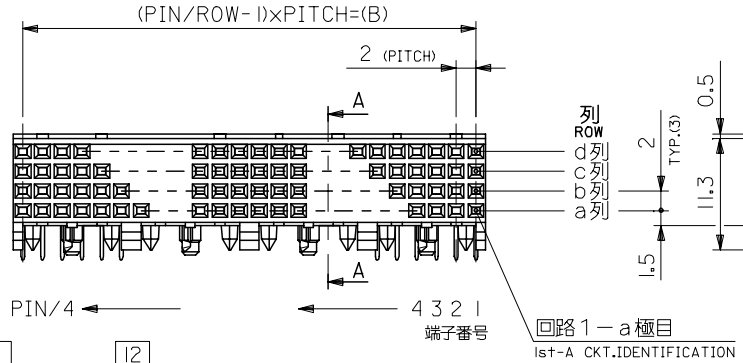


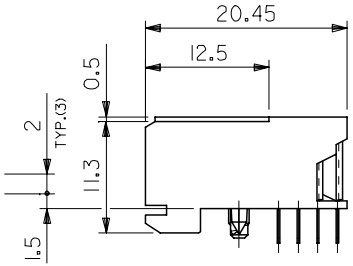


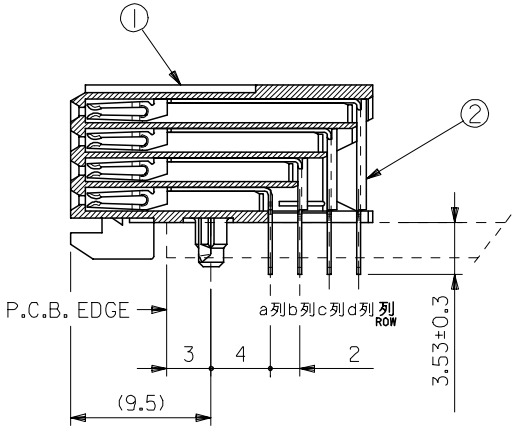


A-A
(NON-SCALE)

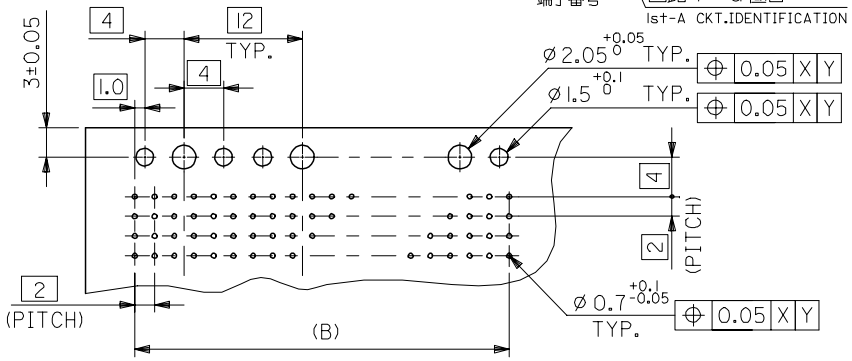


基板穴推奨寸法（部品実装）
RECOMMENDED P.C.B.LAYOUT (COMPONENT SIDE)

注記
NOTE :

1. ターミナル　めっき仕様
TERMINAL PLATING
金めっき: 0.38μ m MIN.（接点部）
GOLD : 0.38 μm MIN. (CONTACT AREA)
TIN : 1.0~2.5 μm.　（半田付け部）
TIN: 1.0~2.5 μm.　(SOLDER AREA)
ニッケルメッキ: 2.0 μ m MIN.（下地めっき）
NICKEL : 2.0 μ m MIN. (UNDER PLATING)

2. 推奨基板厚 : t=2.4mm
RECOMMENDED P.C.B. THICKNESS : t=2.4mm

3. 適合プラグ : 53901-***4, 55222-***4, 55089-***4
APPLICABLE PLUG :

4. 製品番号及びロットナンバー
MATERIAL NO. & LOT NO.

| | | | |
|---|---|---|---|
| 106 | 107.98 | 54867- 2168 | 216 |
| 94 | 95.98 | 54867 -1928 | 192 |
| 46 | 47.98 | 54867 -0968 | 96 |
| 10 | 11.98 | 54867 -0248 | 24 |
| B | A | MATERIAL NO. | PIN |

MODIFICATION
EC NO: SH2007-0175 2007/04/10
DRWN: FYANG05 2007/04/09
CHKD: SHAO007 2007/04/09
APPR: JNCHEN 2007/04/18
REV DESCRIPTION

QUALITY SYMBOLS
▼=0
▽C=0

GENERAL TOLERANCES (UNLESS SPECIFIED)

| | mm | INCH |
|---|---|---|
| 4 PLACES | ± --- | ± --- |
| 3 PLACES | ± --- | ± --- |
| 2 PLACES | ± --- | ± --- |
| 1 PLACE | ± --- | ± --- |
| ANGULAR ± 3 ° | | |

DRAFT WHERE APPLICABLE MUST REMAIN WITHIN DIMENSIONS

DIMENSION STYLE: MM ONLY
SCALE: MM ONLY
DESIGN UNITS: METRIC
THIRD ANGLE PROJECTION

| | | |
|---|---|---|
| DRAWN BY | HWWANG | DATE 04/09/26 |
| CHECKED BY | GMA | DATE 04/09/27 |
| APPROVED BY | VINCENT | DATE 04/09/26 |

TITLE
MFB B/B CONN
4ROW REC. ASS'Y
DIP TYPE (LEAD FREE)

molex MOLEX INCORPORATED

MATERIAL NO. SEE TABLE
DOCUMENT NO. SD-54867-006
SHEET NO. 1 OF 1
SIZE A3

THIS DRAWING CONTAINS INFORMATION THAT IS PROPRIETARY TO MOLEX INCORPORATED AND SHOULD NOT BE USED WITHOUT WRITTEN PERMISSION