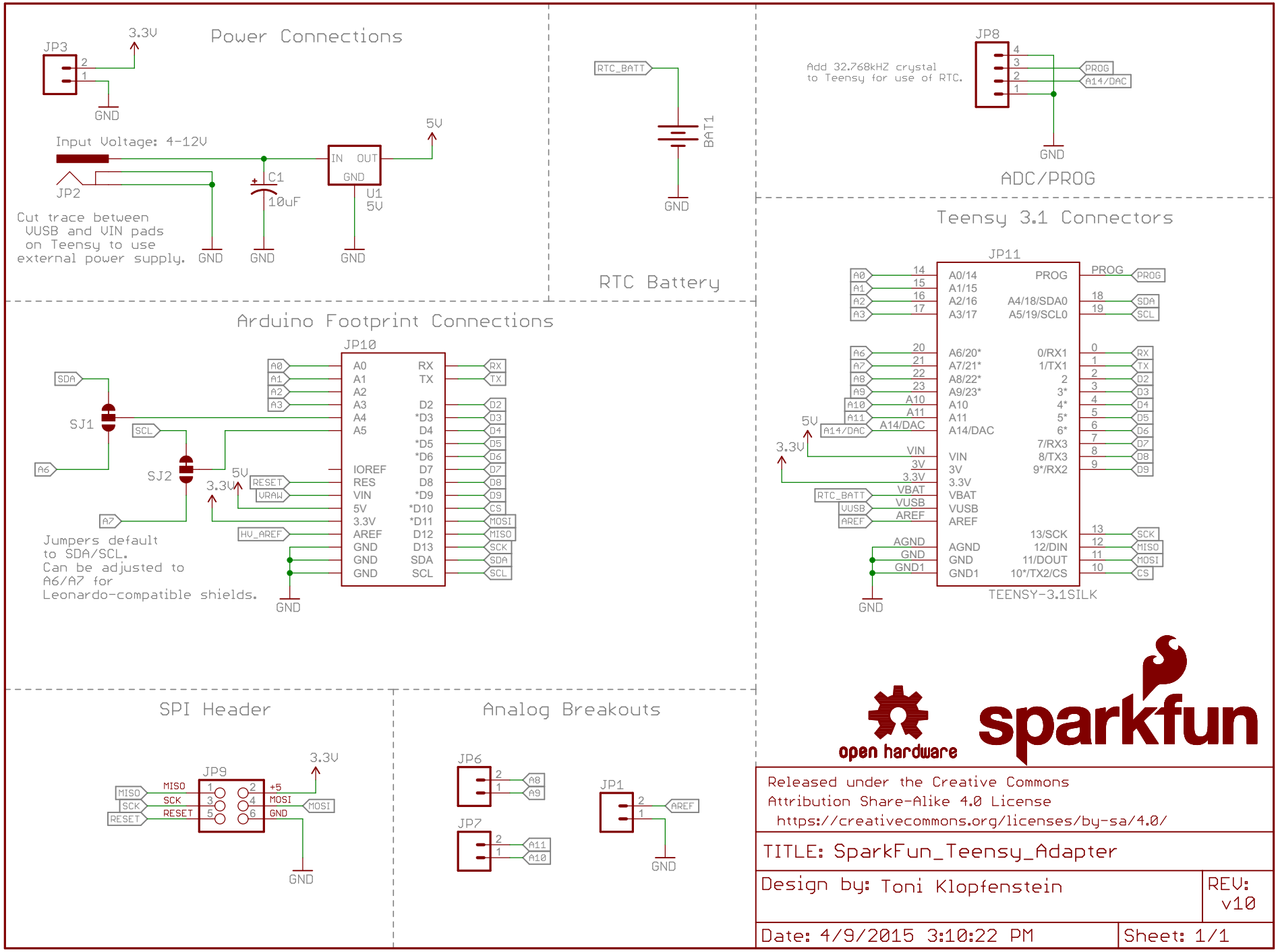

Released under the Creative Commons Attribution Share-Alike 4.0 License
https://creativecommons.org/licenses/by-sa/4.0/

TITLE: SparkFun_Teensy_Adapter

Design by: Toni Klopfenstein

REV: v10

Date: 4/9/2015 3:10:22 PM

Sheet: 1/1