NOTES:

1- MATERIAL: HOUSING: LCP GLASS FILLED UL94-V0
COLOUR: BLACK
TERMINAL: BRASS,
PLATING TYPE 2: PLATED WITH 0.00127 MIN GOLD IN CONTACT AREA, 0.00190 MIN PURE TIN IN TAIL AREA BOTH OVER 0.00127 MIN NICKEL OVERALL

TYPE 6: POST PLATE 0.00005 MIN GOLD FLASH OVER 0.00100 MIN PALLADIUM-NICKEL IN CONTACT AREA, 0.00190 MIN PURE TIN IN TAIL AREA, BOTH OVER 0.00127 MIN NICKEL OVERALL
SHIELD: BRASS PLATED WITH 0.0020 MIN TIN .

2- JACK FOR MATING WITH F.C.C. 68 TYPE PLUG MOLEX 95043 SERIES
3- P.C.BOARD THICKNESS: 1.57
4- PRODUCT SPECIFICATION: PS-95540-002
5- APPLICATION SPCEIFICATION: AS-85513-001
6- PACKAGING SPECIFICATION: PK-95022
7- MANUFACTURING I.D. CAN BE EITHER MG, MXF OR MXI.
8- LAST INSPECTION NUMBER 26

ENG. NO.	HSG SIZE	LOADED CKTS	WITH RIBS	TOOLED	PLATING OPTION
95552-2887	8	8	YES	YES	2
95552-7887	8	8	YES	YES	6

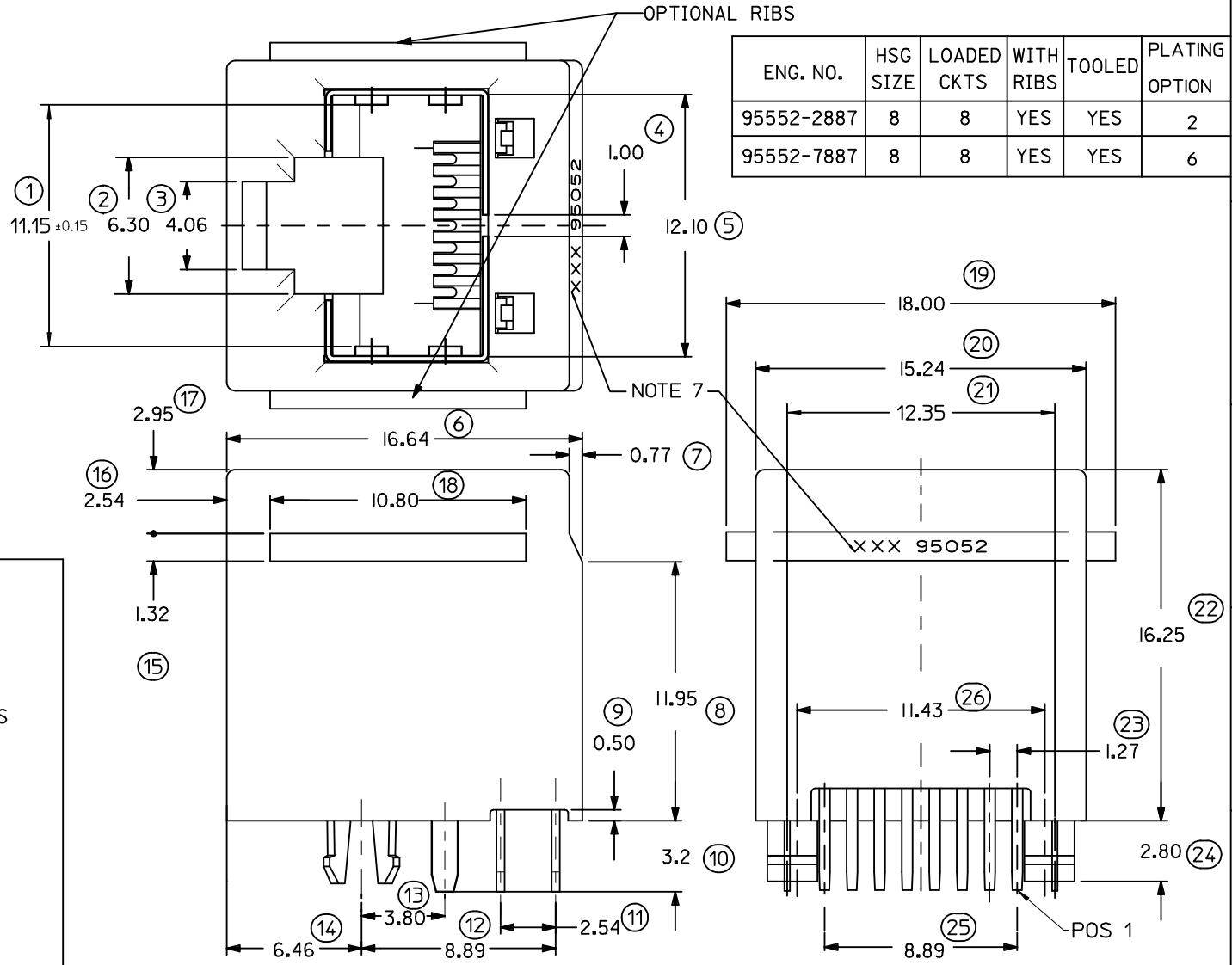

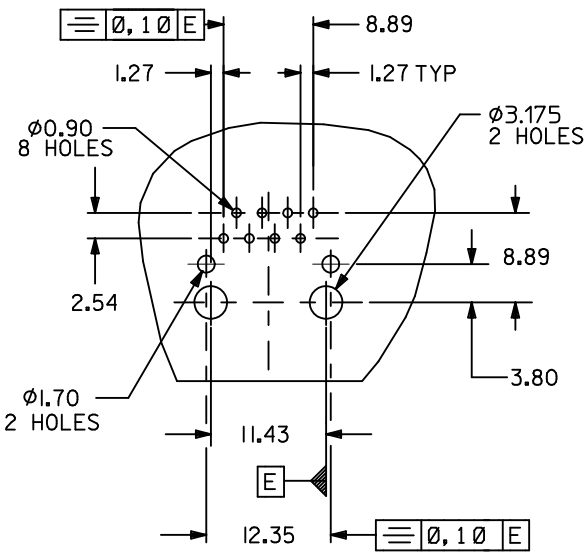

P.C.B. MOUNTING PATTERNS
(SCALE 2 : 1)

VIEW FROM COMPONENT SIDE
ALL DIMENSIONS REFERENCE ONLY

ADDED PART OPTION
EC NO: E2012-0079 2011/09/14
DRWN:DBYRNES
CHKD:
APPR:EFOLAN 2011/09/28
DESCRIPTION
D
REV

QUALITY SYMBOLS
▼=0
(C)=0

GENERAL TOLERANCES (UNLESS SPECIFIED)

	mm	INCH
4 PLACES	± ---	± ---
3 PLACES	± ---	± .010
2 PLACES	± 0.25	± .014
1 PLACE	± 0.35	± ---
ANGULAR ± 2 °		

DRAFT WHERE APPLICABLE MUST REMAIN WITHIN DIMENSIONS

DIMENSION STYLE: MM/IN
SCALE: 1:1
DESIGN UNITS: METRIC
THIRD ANGLE PROJECTION

DRAWN BY: DBYRNES DATE: 2007/02/28
CHECKED BY: EOMAHONY DATE: 2007/02/28
APPROVED BY: JB DATE: 2007/02/28

TITLE: TOP ENTRY SHIELDED JACK W.E. TYPE

molex MOLEX INCORPORATED

MATERIAL NO.: SEE CHART
DOCUMENT NO.: SD-95552-001
SHEET NO.: 1 OF 1
SIZE: A3

THIS DRAWING CONTAINS INFORMATION THAT IS PROPRIETARY TO MOLEX INCORPORATED AND SHOULD NOT BE USED WITHOUT WRITTEN PERMISSION