© – TE Connectivity. All Rights Reserved.

REVISIONS					
P	LTR	DESCRIPTION	DATE	DWN	APVD
	B1	ECR-19-014657	13DEC2020	RR	SZ

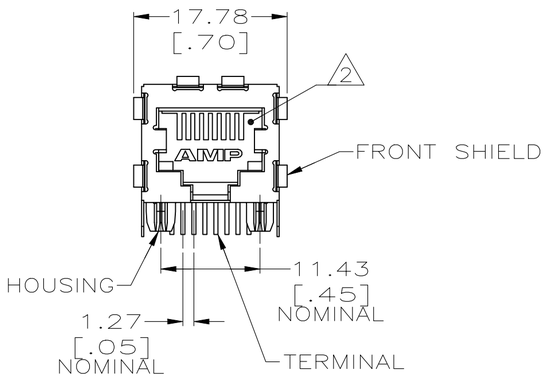

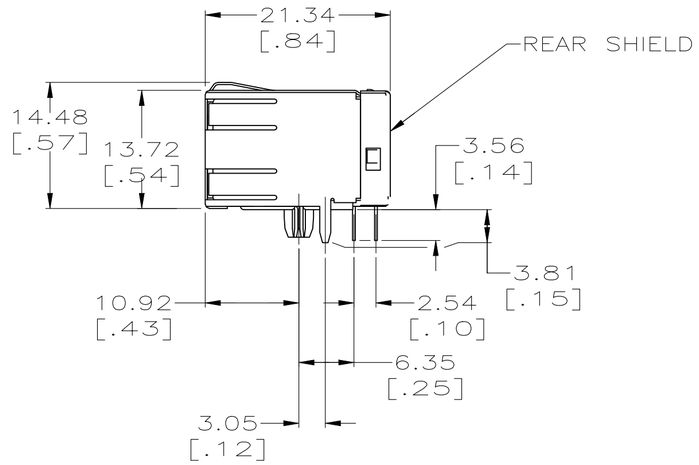

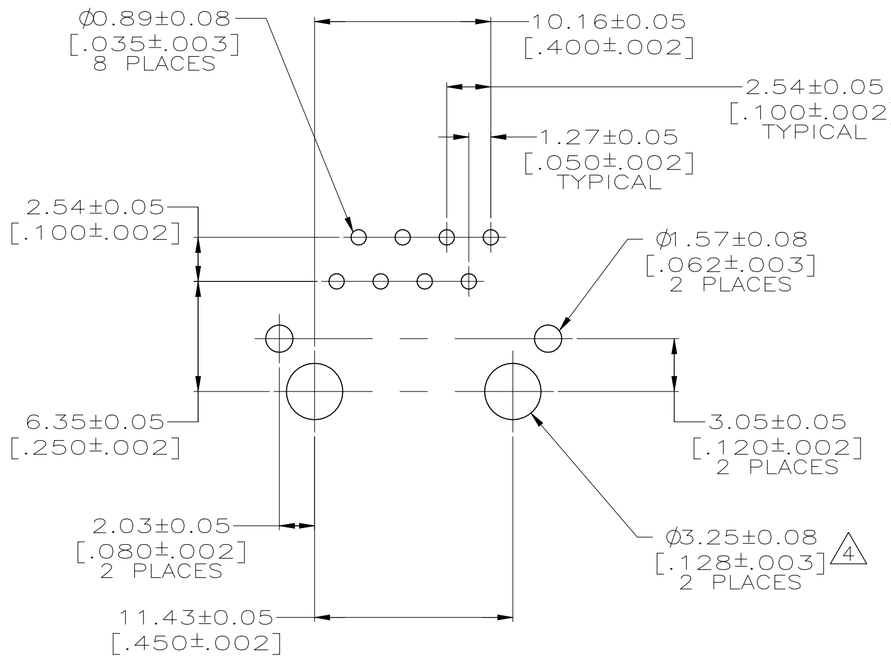

SUGGESTED PC BOARD LAYOUT
COMPONENT SIDE
SCALE 4:1

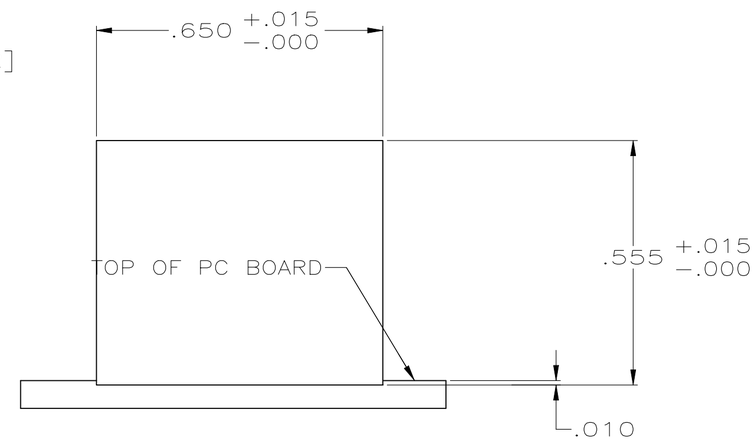

SUGGESTED PANEL CUTOUT
SCALE 4:1

1. MATERIAL: HOUSING – NYLON, BLACK, IR REFLOW COMPATIBLE, UL 94V–O.
TERMINALS – 0.33[.013] THICK PHOS BRONZE PLATED WITH 1.27μm[.000050] MINIMUM THICK HARD GOLD IN LOCALIZED AREA AND 3.81μm [.000150] MINIMUM THICK MATTE TIN IN SOLDER AREA OVER 1.27μm[.000050] MINIMUM THICK NICKEL UNDERPLATE.
SHIELDS – 0.25[.010] THICK COPPER ALLOY PLATED WITH 2.03μm[.000080] MINIMUM BRIHT TIN OVER 1.27μm[.000050] MINIMUM NICKEL.

2. JACK CAVITY CONFORMS TO FCC RULES AND REGULATIONS, PART 68 SUBPART F.

3. CAUTION: CATEGORY 5 JACK SOLDER TAIL POSITIONS DO NOT FOLLOW SAME NUMBER SEQUENCE AS THAT OF THE TRADITIONL JACKS.

4. USE #30 DRILL BIT OR 3.25mm DRILL BIT WHEN PRODUCING THESE PCB HOLES.

5. MATERIAL: HOUSING – NYLON, BLACK, IR REFLOW COMPATIBLE, UL 94V–O.
TERMINALS – 0.33 [.013] THICK PHOS BRONZE PLATED WITH 1.27 μm [.000050] MINIMUM THICK HARD GOLD IN LOCALIZED AREA AND 3.81 μm [.000150] MINIMUM THICK MATTE TIN IN SOLDER AREA OVER 1.27 μm [.000050] MINIMUM THICK NICKEL UNDERPLATE.
SHIELDS – 0.25 [.010] THICK COPPER ALLOY PLATED WITH 1.27 μm [.000050] MINIMUM NICKEL AND 2.03 μm [.000080] MINIMUM HOT TIN DIP ON PCB GROUND TABS.

5406300

TRADITIONAL JACK

3

CATEGORY 5 & 5e JACK

SUPERSEDED BY -2	5	5406300–2
	1	~~5406300–1~~
	MATERIAL AND FINISH	PART NUMBER

THIS DRAWING IS A CONTROLLED DOCUMENT.

DIMENSIONS: mm [INCHES]

TOLERANCES UNLESS OTHERWISE SPECIFIED:
0 PLC ± –
1 PLC ± –
2 PLC ± 0.25[.01]
3 PLC ± 0.13[.005]
4 PLC ± –
ANGLES ± –

MATERIAL 1 5
FINISH 1 5

DWN J. ALCORTA – DOCK5 08JUN2005
CHK J. WESTMAN 08JUN2005
APVD S. FLICKINGER 08JUN2005
PRODUCT SPEC 108–1163
APPLICATION SPEC 114–2048
WEIGHT 0.000000

TE Connectivity

NAME
MODULAR JACK ASSY,
8 POSN,SHIELDED,
REVERSE PANEL GROUND TABS, CAT 5e

SIZE	CAGE CODE	DRAWING NO	RESTRICTED TO
A2	00779	C-5406300	—

CUSTOMER DRAWING | SCALE 2:1 | SHEET 1 OF 1 | REV B1

1471-9 (1/15)