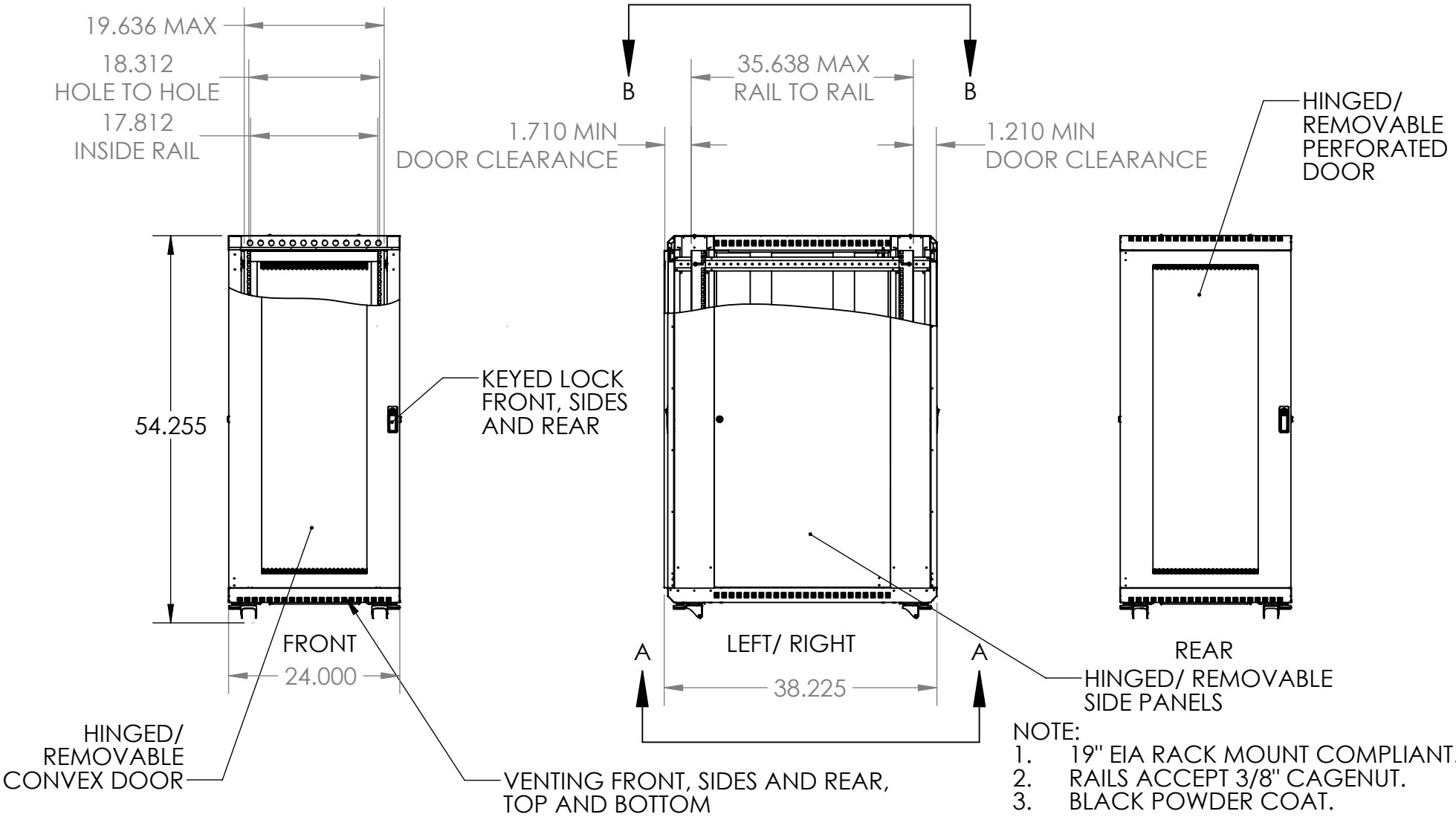

NOTE:
1. 19" EIA RACK MOUNT COMPLIANT.
2. RAILS ACCEPT 3/8" CAGENUT.
3. BLACK POWDER COAT.

WEB PRINT

PROPRIETARY AND CONFIDENTIAL
THE INFORMATION CONTAINED IN THIS DRAWING IS THE SOLE PROPERTY OF KENDALL HOWARD. ANY REPRODUCTION IN PART OR AS A WHOLE WITHOUT THE WRITTEN PERMISSION OFKENDALL HOWARD IS STRICTLY PROHIBITED.

NEXT ASSY	USED ON
APPLICATION	

UNLESS OTHERWISE SPECIFIED:
DIMENSIONS ARE IN INCHES
TOLERANCES:
FRACTIONAL ±1/8
ANGULAR: BEND ±1DEGREE
TWO PLACE DECIMAL ±.03
THREE PLACE DECIMAL ±.01

Surface Area

MATERIAL

FINISH

DO NOT SCALE DRAWING

	NAME	DATE
DRAWN		
CHECKED		
ENG APPR.		
MFG APPR.		
Q.A.		

COMMENTS:

KENDALL HOWARD™

TITLE:
27U LINIER FS CONVEX
FRONT/ VENTED REAR

SIZE	DWG. NO.	REV
A	3110-3-001-27	

SCALE: 1:20 | WEIGHT: 130.41 | SHEET 1 OF 2

5 4 3 2 1

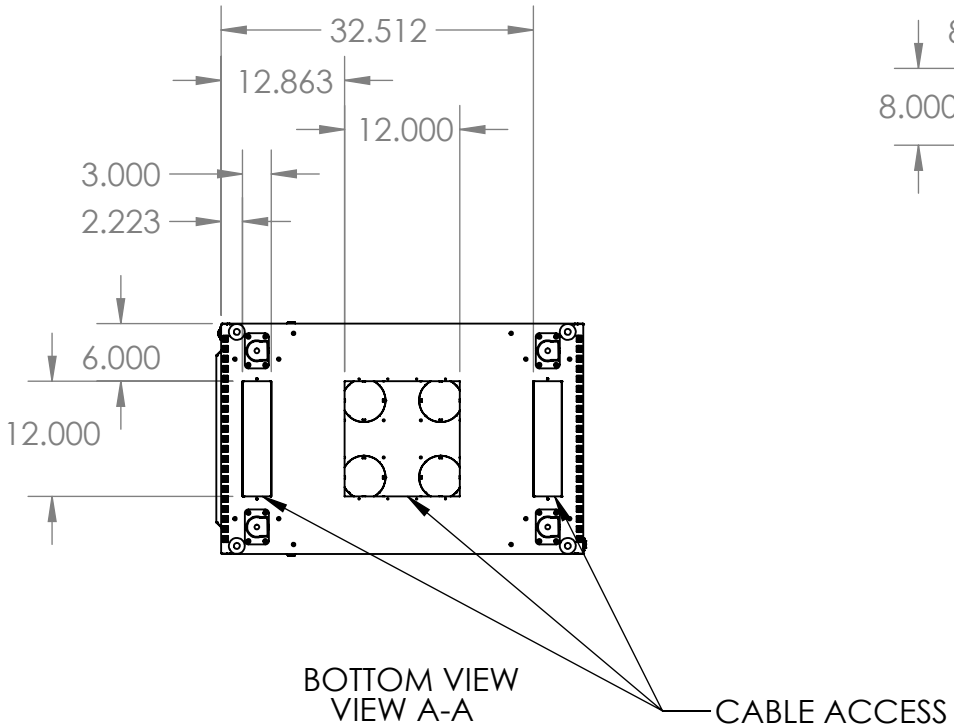

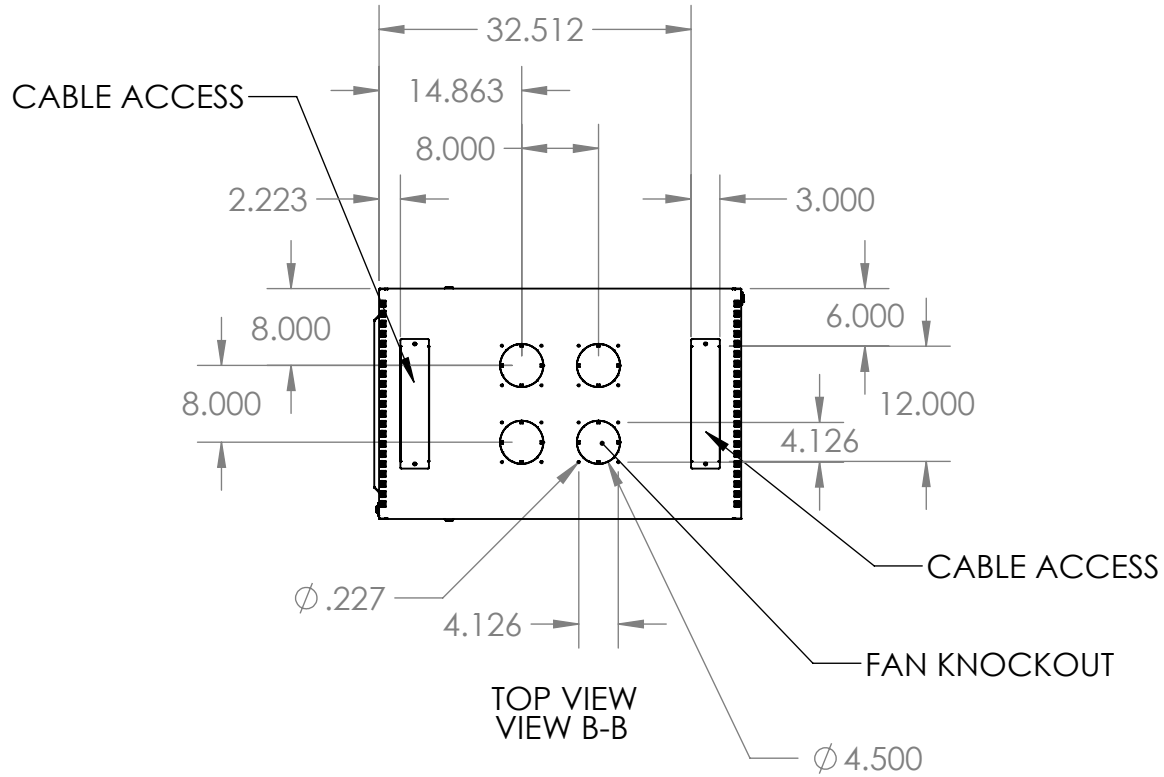

WEB PRINT

NEXT ASSY	USED ON
APPLICATION	

PROPRIETARY AND CONFIDENTIAL
THE INFORMATION CONTAINED IN THIS DRAWING IS THE SOLE PROPERTY OF KENDALL HOWARD. ANY REPRODUCTION IN PART OR AS A WHOLE WITHOUT THE WRITTEN PERMISSION OFKENDALL HOWARD IS STRICTLY PROHIBITED.

UNLESS OTHERWISE SPECIFIED:
DIMENSIONS ARE IN INCHES
TOLERANCES:
FRACTIONAL ±1/8
ANGULAR: BEND ±1DEGREE
TWO PLACE DECIMAL ±.03
THREE PLACE DECIMAL ±.01

Surface Area

MATERIAL

FINISH

DO NOT SCALE DRAWING

	NAME	DATE
DRAWN		
CHECKED		
ENG APPR.		
MFG APPR.		
Q.A.		

COMMENTS:

KENDALL HOWARD™

TITLE:
27U LINIER FS CONVEX FRONT/ VENTED REAR

SIZE	DWG. NO.	REV
A	3110-3-001-27	

SCALE: 1:20 | WEIGHT: 130.41 | SHEET 2 OF 2

5 4 3 2 1