PART NO.	A24001-010	REV	ECO	DATE	APP
		E	102048	11-03-15	TLM

MATERIALS & SPECIFICATIONS

INSULATOR:
POLYPHENYLENE SULFIDE (PPS) PER MIL-M-24519, TYPE GST 40F.

CONTACT:
BERYLLIUM COPPER PER ASTM B194, C17200. GOLD PLATED PER ASTM B488, (HARD GOLD) TYPE II CODE C CLASS 1.27.

TERMINATION:
SOLDER COATED WITH SN63A PER J-STD-006 OR AMS-P-81728.

LATCH BOX:
BERYLLIUM COPPER PER ASTM B194 NICKEL PLATE PER SAE-AMS-2404.

CURRENT CAPACITY:
3 AMP MAX.

CONTACT RESISTANCE:
26 MILLIOHMS (65mV) MAX @ 2.5 AMPS.

PERFORMANCE:
PRODUCT FAMILY TESTED TO AND PASSED THE PERFORMANCE SPECIFICATIONS OF TABLE VII OF MIL-DTL-83513.

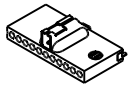

ACTUAL SIZE

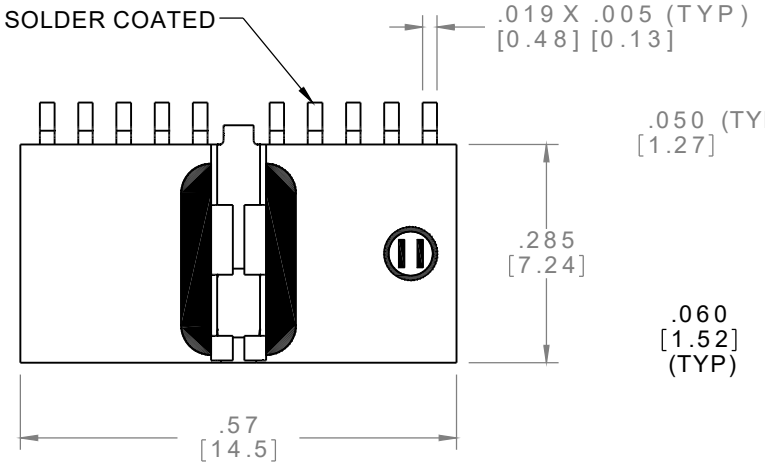

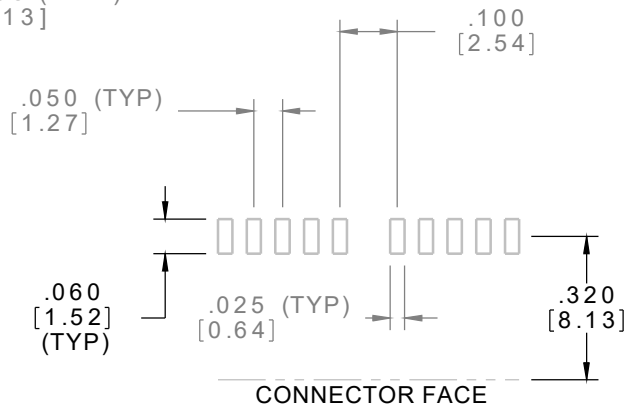

SUGGESTED PAD LAYOUT

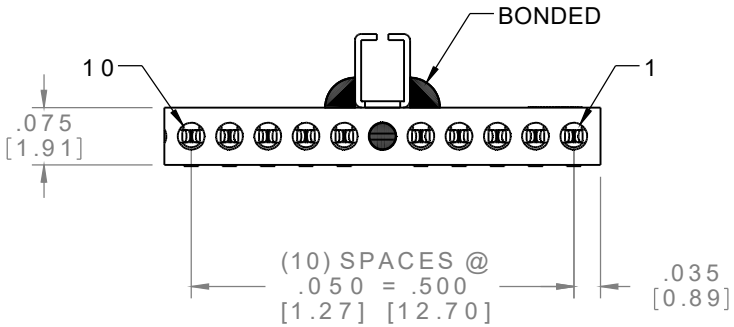

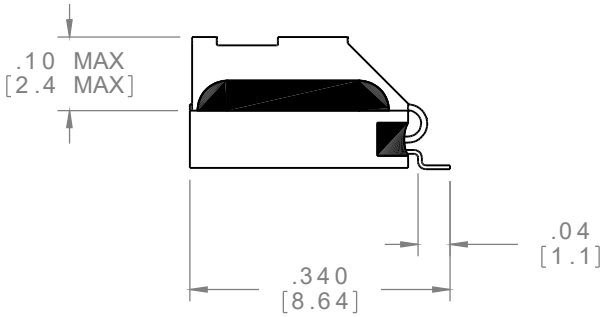

NOTE:

DIMENSIONS IN [ ] ARE IN MILLIMETERS UNLESS OTHERWISE NOTED AND ARE FOR REFERENCE ONLY

PS1	THIRD ANGLE	THIS DRAWING CONTAINS CONFIDENTIAL AND PROPRIETARY INFORMATION WHICH IS THE PROPERTY OF OMNETICS CONNECTOR CORP. THIS DOCUMENT MAY NOT, IN WHOLE OR IN PART, BE DUPLICATED, OR DISCLOSED FOR ANY PURPOSE, WITHOUT WRITTEN PERMISSION FROM OMNETICS CONNECTOR CORP.	OMNETICS CONNECTOR CORPORATION	CAGE CODE 61873
	-TOLERANCES- UNLESS OTHERWISE NOTED DIMENSIONS IN INCHES	DFTM. DEL — DATE 09-26-02	7260 COMMERCE CIRCLE EAST MINNEAPOLIS, MN 55432 WWW.OMNETICS.COM	DWG NO. A24001-010
SLDW	2 PL DEC± .01 3 PL DEC± .005 4 PL DEC± .0005 ANGLES ± 1°	CHK'D. — DATE	TITLE: (10) PIN MALE CONNECTOR W/LATCH	SHEET 1 OF 1 — REV E
		APP'D. — DATE		SCALE: 4:1