# Ha-VIS RFID SL 89 (MT)

## Passive UHF Transponder
## Ha-VIS RFID SL 89 (MT)

## Advantages

- Extremly high mechanical protection
- Degree of protection IP 69K
- EPC C1 Gen2 compatible
- Extended memory

## Applications

- Slot tag for integration in metallic objects like barrels, pallets or extruded profiles (slot dimensions 140 x 6 mm)
- Read range (free space, 2 W ERP): ≥ 4.0 m

| Identification | Part number |
|---|---|
| Passive UHF Transponder<br>Ha-VIS RFID SL 89 (MT) | |
| Packaging unit: | |
| 10 piece | 20 92 641 0601 |
| 50 piece | 20 92 641 0602 |

Drawing — Dimensions in mm

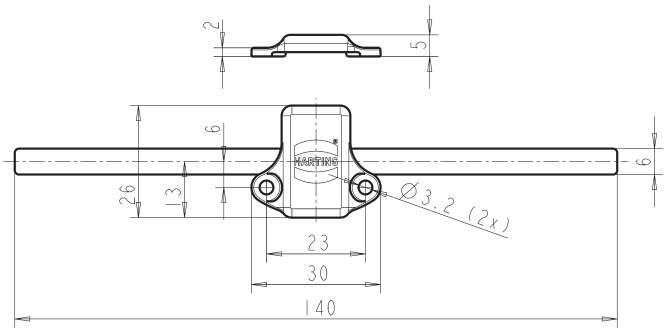


| Type<br>Ha-VIS RFID ... | Frequency range | Protocol | Chip | Memory |
|---|---|---|---|---|
| SL 89 (MT) | 860 ... 960 MHz | EPC C1Gen2 | Alien Higgs 3 | 512 Bit |

## Technical characteristics

**Temperature range**

| | |
|---|---|
| Operational range (read) | -50 °C ... +85 °C |
| Operational range (write) | -50 °C ... +85 °C |
| Storage | -65 °C ... +130 °C |

**Housing**

| | |
|---|---|
| Size (W x D x H) | 30 x 26 x 5 mm |
| Degrees of protection | IP 64 / IP 67 / IP 69K |
| Mounting | M3 screws or rivets with washers |
| Colour | black |
| Slot dimensions | 140 x 6 mm |

**HARTING Electric GmbH & Co. KG**
Wilhelm-Harting-Straße 1 | D-32339 Espelkamp | P.O.Box 14 73 | D-32328 Espelkamp
Phone: +49 5772 47-97 100 | Fax: +49 5772 47-97 688 | RFID@HARTING.com | www.HARTING-RFID.com