Product Change Notification

TE Connectivity

Product Change Notification: P-22-023443 **PCN Date:** 09-OCT-22

TE would like to inform you of the following change(s) to the listed TE Connectivity Product. In case of any further questions about this change(s), please contact your TE Connectivity Sales Engineer. Affected part, drawing and/or specification numbers are listed on the attached sheet(s).

General Product Description:
CMC32P&48P Family seal dual source material and replacement

Description of Changes
CMC 32P&48P Family seal dual source material study and replacement due to main source material shortage. Related P/N: x-2137299-x; 2352158-x; x-2352225-x;x-2050981-x;x-2351648-x;x-2278548-x;

CMC 32P&48P Family seal dual source_PCN support

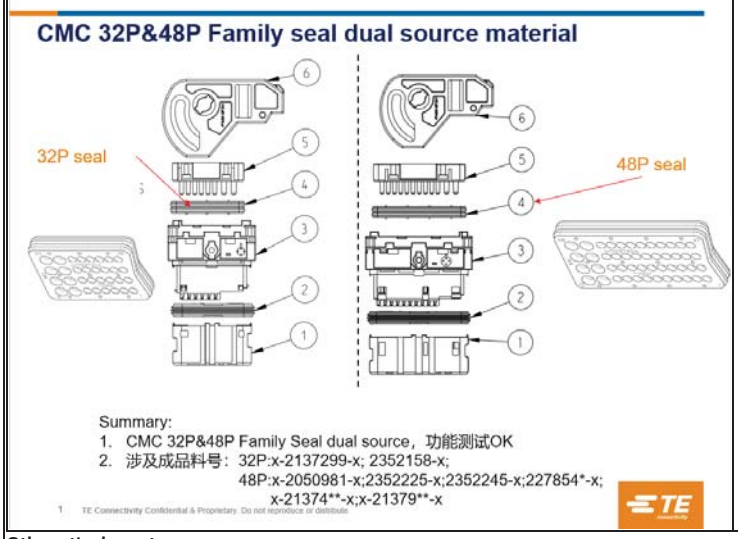

Other attachments:

CMC 32P P21-906151-18 TEST REPORT.pdf
48&64POS P21-906151-17 TEST REPORT.pdf
CMC 32P&48P Family seal dual source_PCN support.pdf

Reason for Changes:	
Product improvement.CMC 32P&48P Family seal dual source material study and replacement due to main source material shortage	
Estimated Dates:	
Last Order Date (Obsolete Parts Only):	**First Date To Ship** (Changed Parts Only):
	20-OCT-2022
Last Ship Date (Obsolete Parts Only):	**Last Date for Mixed Shipments:** (Changed Parts Only):
	No Mixed Shipments

Part Number(s) being Modified:

Part Number	Part Discontinued per PCN	Customer Drawing	Customer Part Number	Alias Part Number(s)	Substitute Part Number	Substitute Alias Part Number(s)	Description Of Difference
2137489-1	NO						

Part Number(s) being Modified:

Part Number	Part Discontinued per PCN	Customer Drawing	Customer Part Number	Alias Part Number(s)	Substitute Part Number	Substitute Alias Part Number(s)	Description Of Difference
2137489-1	NO						

CMC 32P&48P Family seal dual source material

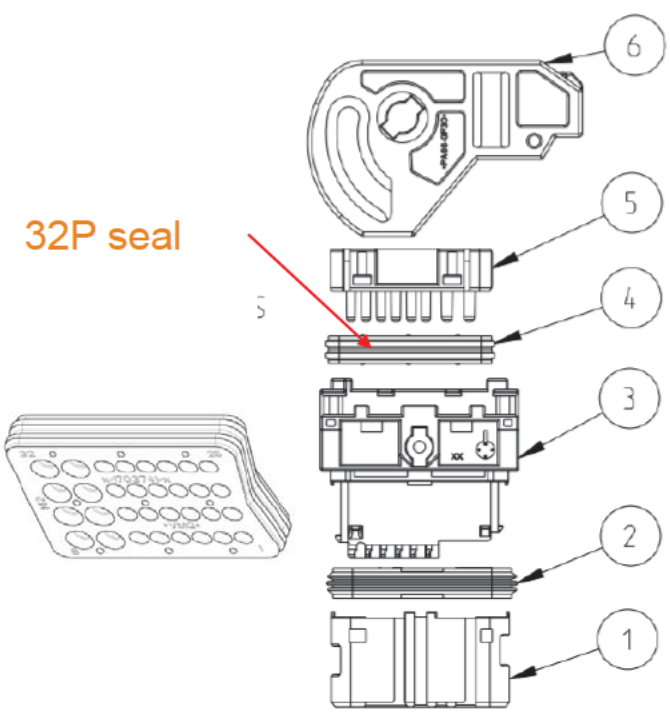

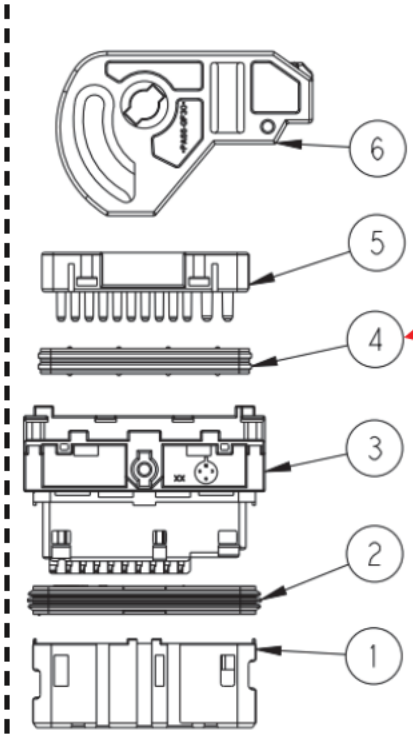

Summary:

1. CMC 32P&48P Family Seal dual source，功能测试OK
2. 涉及成品料号：32P:x-2137299-x; 2352158-x;
   48P:x-2050981-x;2352225-x;2352245-x;227854*-x;
   x-21374**-x;x-21379**-x