ON Semiconductor®
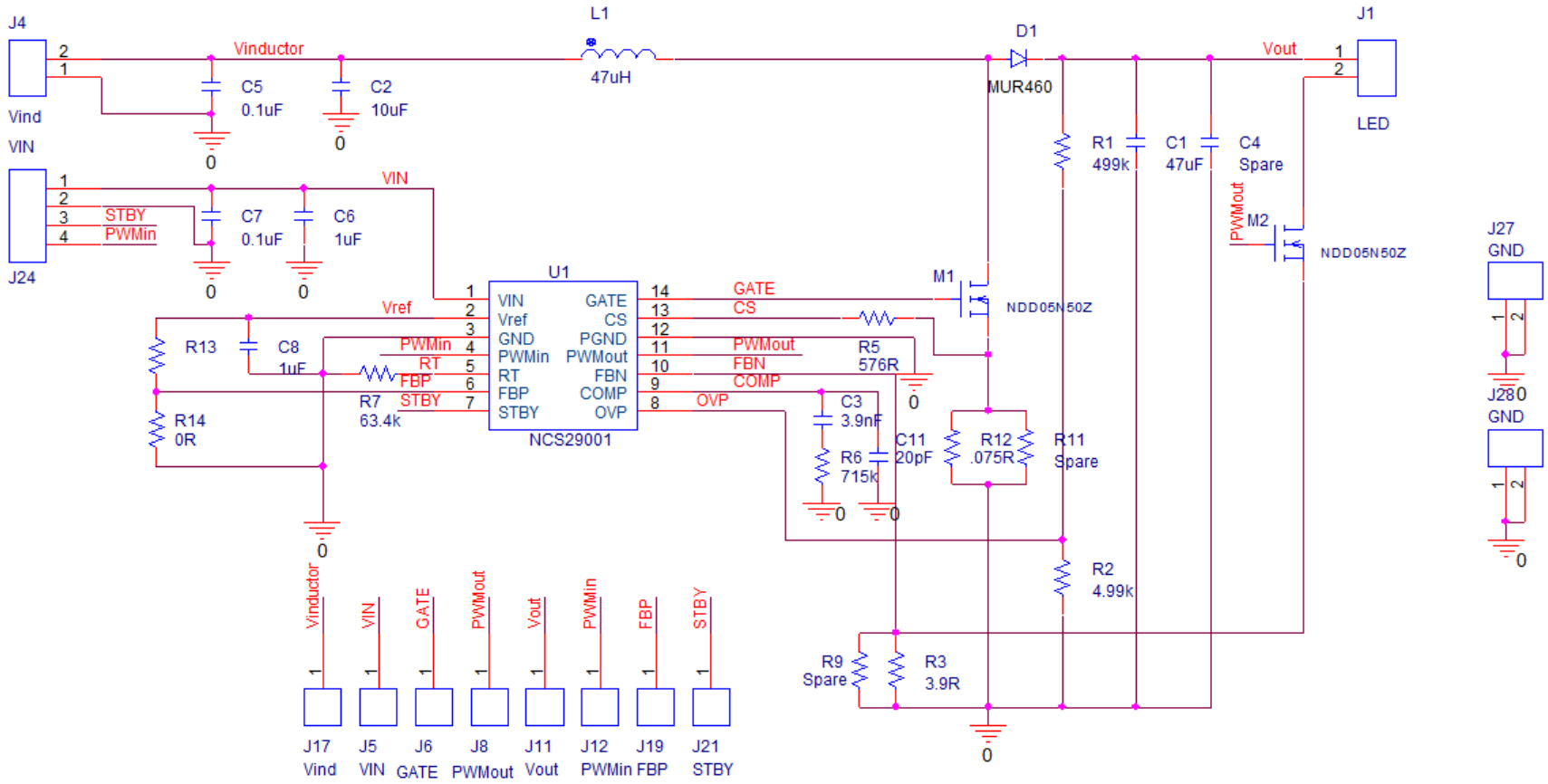
Schematic for the NCS29001DGEVB Evaluation Board