**Mounting Option**
04-.156 (3.96) Dia. Mounting Holes

**Contact Detail**
542-Wire Wrap .025 Sq.(0.64 Sq.) - Tail LG=.655(16.64)
.100 [2.54] Contact Spacing x .200 [5.08] Row Spacing

THIS IS A C.A.D. GENERATED DRAWING
DO NOT MAKE MANUAL REVISIONS TO MASTER

| ISSUE NUMBER |
|---|
| ORIGINAL 1 |

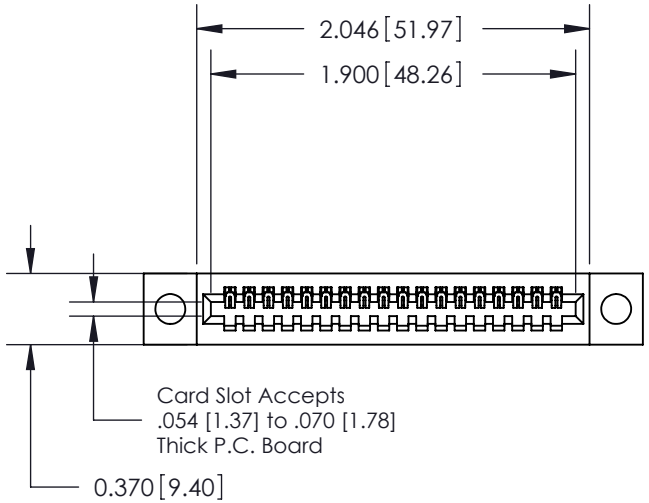


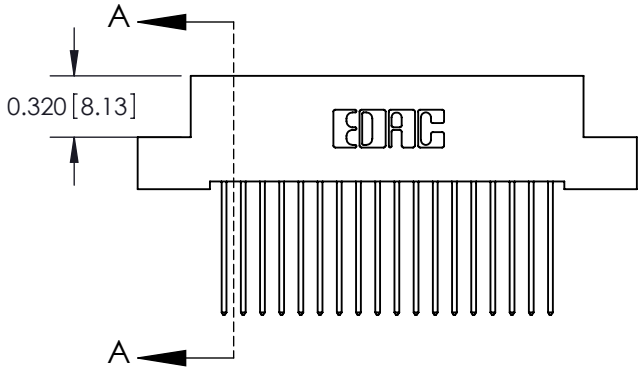


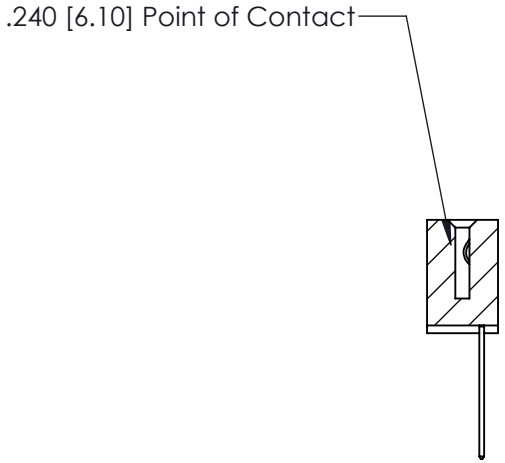


SECTION A-A

**See Accompanying Pages for:**
- **Contact Bend Details**
- **Mounting Options**

842/892 Series High Temp Card Edge Connector
Part Number: 842-018-542-104

EDAC INC
TORONTO, ONTARIO
CANADA
YOUR CONNECTION TO QUALITY & SERVICE

THESE DRAWINGS AND SPECIFICATIONS ARE THE PROPERTY OF EDAC INC.,AND SHALL NOT BE REPRODUCED,OR COPIED OR USED AS THE BASIS FOR THE MANUFACTURE OR SALE OF APPARATUS WITHOUT WRITTEN PERMISSION.

| | |
|---|---|
| ACAD REFERENCE NO. | 842 ENG MASTER |
| DRAWN: J.LEE | DATE: OCT. 06/09 |
| CHECKED: | DATE: |
| SCALE: NTS | SHEET 1 OF 3 |
| DRAWING NUMBER 842 Assembly | ISSUE 1 |

THIS IS A C.A.D. GENERATED DRAWING
DO NOT MAKE MANUAL REVISIONS TO MASTER

| ISSUE NUMBER |
|---|
| ORIGINAL 1 |

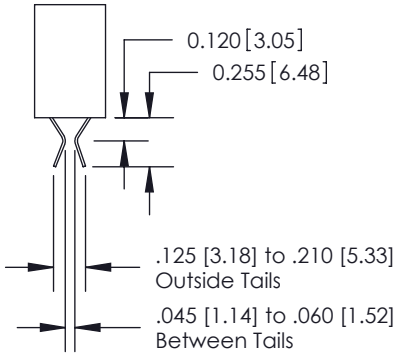


**555 Contact Code**

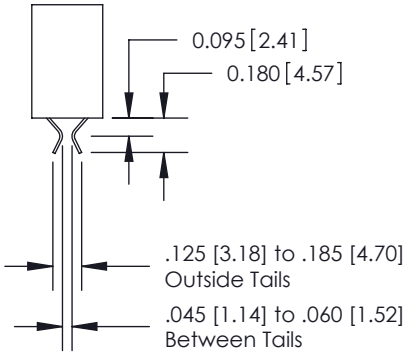


**556 Contact Code**

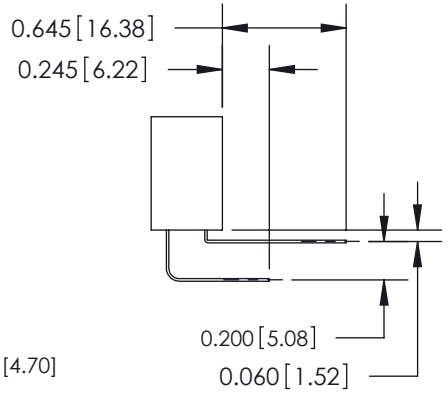


**558 Contact Code**

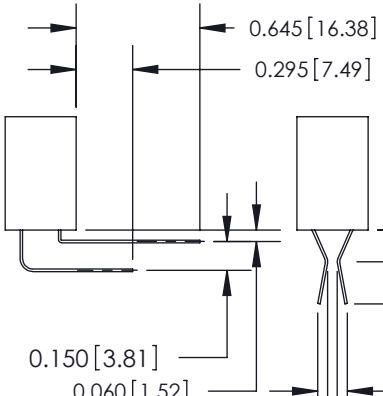


**559 Contact Code**

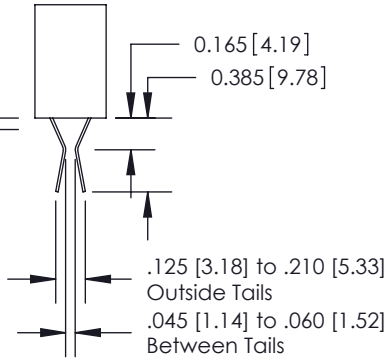


**560 Contact Code**

| | | |
|---|---|---|
| 842/892 Series High Temp Card Edge Connector Contact Bend Detail | ACAD REFERENCE NO. 842 ENG MASTER | |
| | DRAWN: J.LEE | DATE: OCT. 06/09 |
| | CHECKED: | DATE: |
| EDAC INC TORONTO, ONTARIO CANADA YOUR CONNECTION TO QUALITY & SERVICE | SCALE: NTS | SHEET 2 OF 3 |
| THESE DRAWINGS AND SPECIFICATIONS ARE THE PROPERTY OF EDAC INC., AND SHALL NOT BE REPRODUCED, OR COPIED OR USED AS THE BASIS FOR THE MANUFACTURE OR SALE OF APPARATUS WITHOUT WRITTEN PERMISSION. | DRAWING NUMBER 842 Assembly | ISSUE 1 |

THIS IS A C.A.D. GENERATED DRAWING
DO NOT MAKE MANUAL REVISIONS TO MASTER.

| ISSUE NUMBER |
|---|
| ORIGINAL 1 |

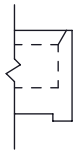

Code x01

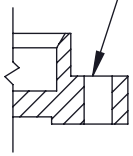


Code x02

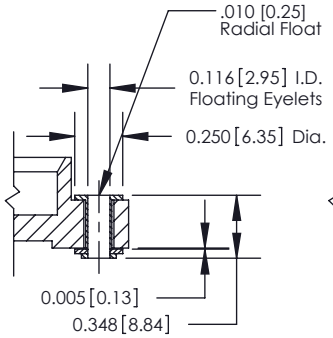


Code x03

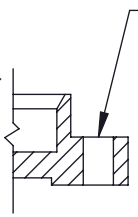


Code x04

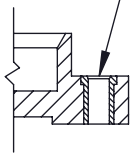


Code x07

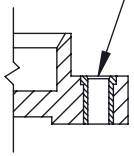


Code x08

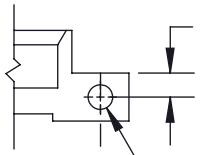


Code x12

# 842/892 Series High Temp Card Edge Connector Mounting Options

| | |
|---|---|
| ACAD REFERENCE NO. | 842 ENG MASTER |
| DRAWN: J.LEE | DATE: OCT. 06/09 |
| CHECKED: | DATE: |
| SCALE: NTS | SHEET 3 OF 3 |
| DRAWING NUMBER: 842 Assembly | ISSUE: 1 |

EDAC INC
TORONTO, ONTARIO
CANADA
YOUR CONNECTION TO QUALITY & SERVICE

THESE DRAWINGS AND SPECIFICATIONS ARE THE PROPERTY OF EDAC INC.,AND SHALL NOT BE REPRODUCED,OR COPIED OR USED AS THE BASIS FOR THE MANUFACTURE OR SALE OF APPARATUS WITHOUT WRITTEN PERMISSION.