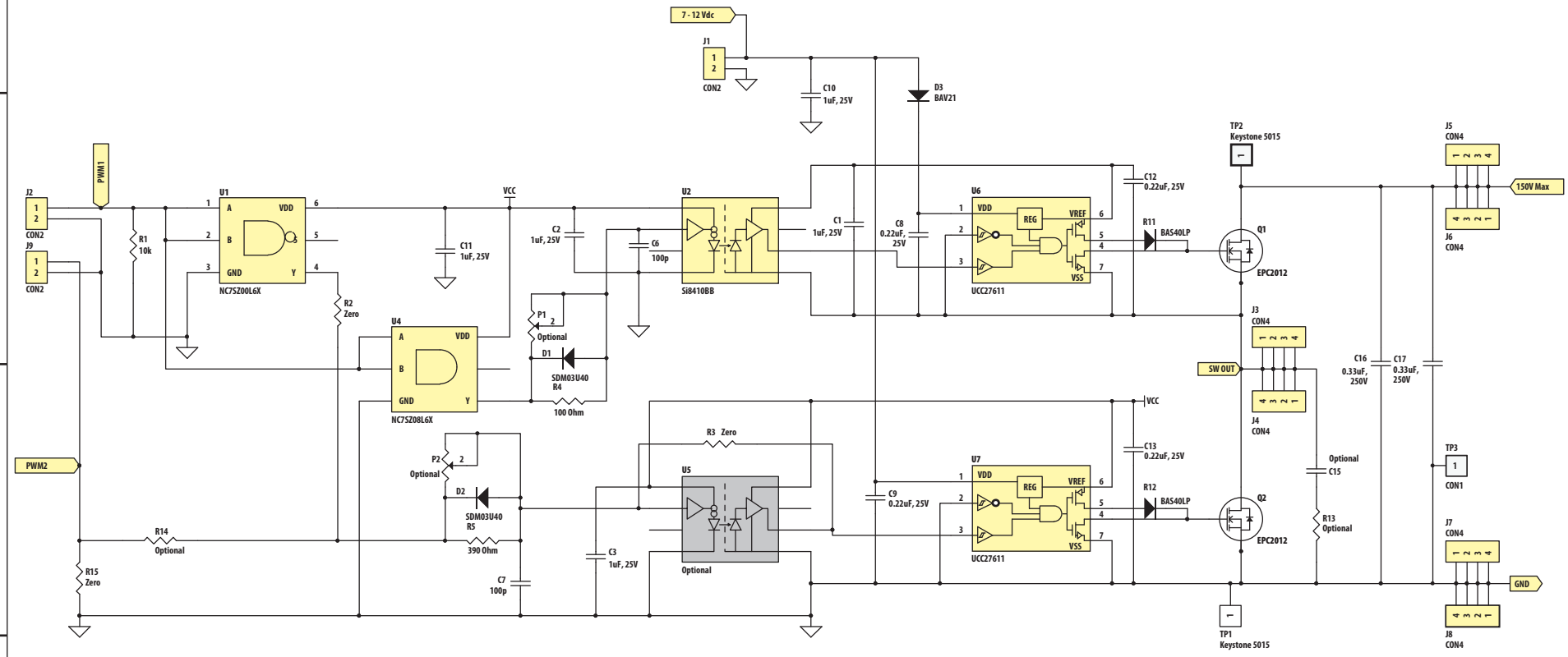

200V Half-Bridge with Gate Drive, using EPC2012

Rev 2.0