NO. OF CIRCUITS	DIM. "A" mm	DIM. "A" in	DIM. "B" mm	DIM. "B" in	DIM. "C" mm	DIM. "C" in	DIM. "D" mm	DIM. "D" in	ASSEMBLY MATERIAL NO. (STANDARD)	ASSEMBLY MATERIAL NO. (-50 OPT)
06	65.2	2.57	41.3	1.63	57.8	2.28	50.9	2.01		386913306
20	180.7	7.12	156.8	6.8	173.4	6.83	166.5	6.56	386912120	386913320

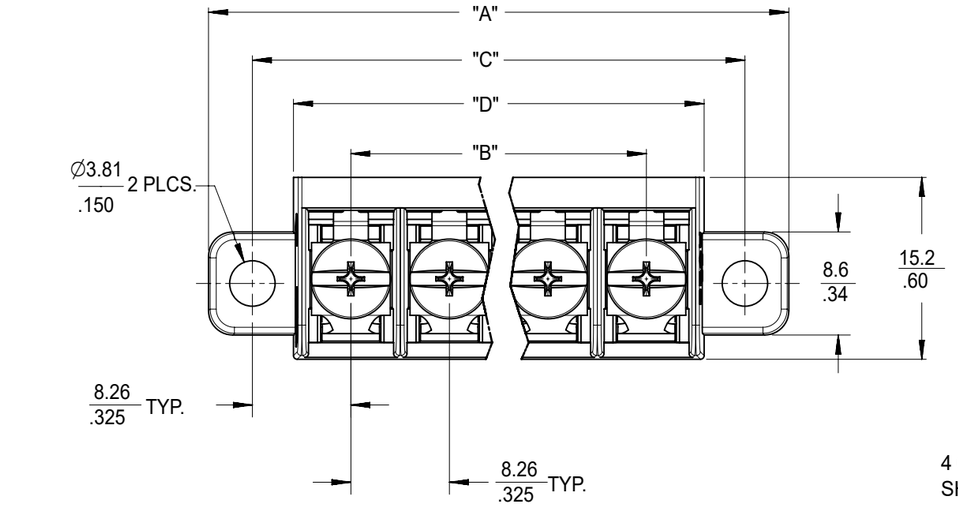

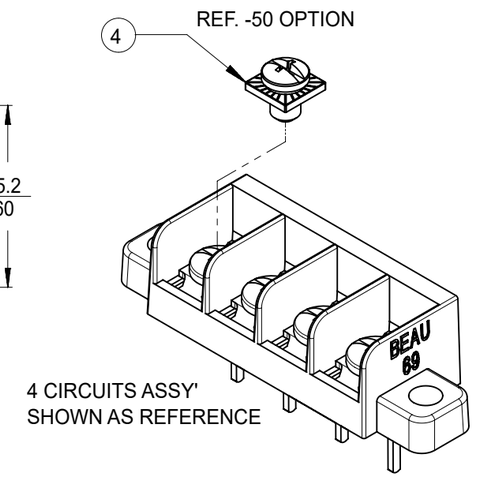

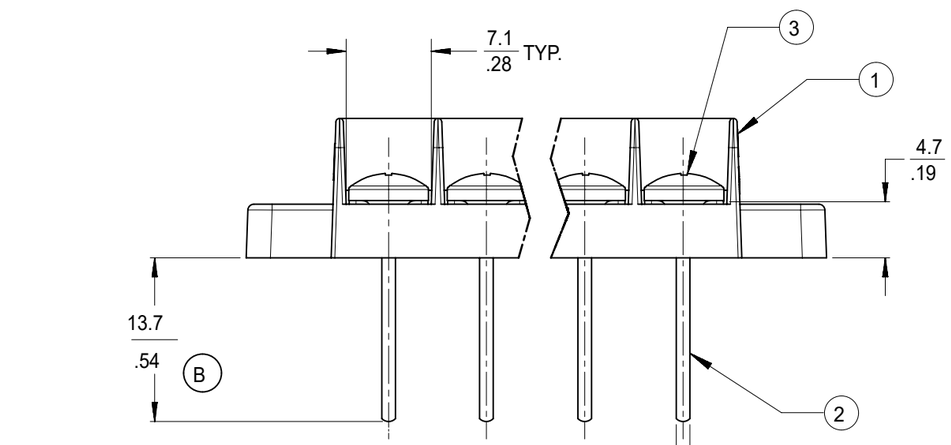

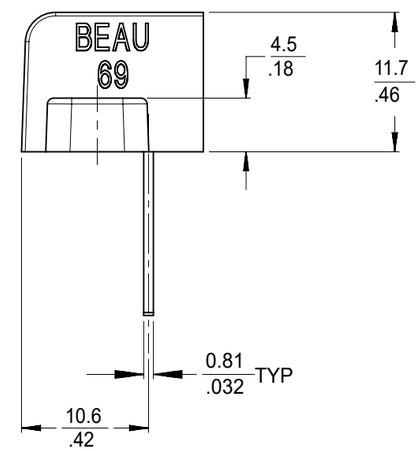

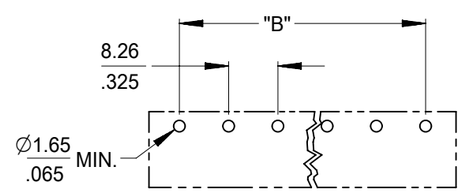

PTH PATTERN

SCALE 1:1

NOTES:
1. MATERIAL: SEE TABLE
2. FINISHES: SEE TABLE.
3. "XX" REFERS TO THE QUANTITY OF CIRCUITS.
4. ROHS COMPLIANT.

ITEM	QTY.	DESCRIPTION	MATERIAL	FINISH
4	XX	SCREW #6-32X.155 PAN PHSLZN/BR/STEEL -50 OPT	STEEL	ZN, CLEAR CHROMATE
3	XX	SCREW #6-32X.160 PAN PHSLNI/BRASS (STANDARD)	BRASS	NICKEL PLATE
2	XX	TERMINAL, PC	BRASS	TIN PLATE
1	1	INSULATOR	POLYESTER (PBT)	BLACK

DOCUMENT STATUS	P1	RELEASE DATE	2022/11/30 11:33:21

THIS DRAWING CONTAINS INFORMATION THAT IS PROPRIETARY TO MOLEX ELECTRONIC TECHNOLOGIES, LLC AND SHOULD NOT BE USED WITHOUT WRITTEN PERMISSION

DIMENSION UNITS: MM/IN
SCALE: 2:1

GENERAL TOLERANCES (UNLESS SPECIFIED)

	MM	INCH
4 PLACES	±	±
3 PLACES	±	± 0.005
2 PLACES	± 0.13	± 0.01
1 PLACE	± 0.3	±
0 PLACES	±	±
ANGULAR TOL	± 2.0 °	

DRAFT WHERE APPLICABLE MUST REMAIN WITHIN DIMENSIONS

CURRENT REV DESC: OBSOLETED PART NUMBERS AS PER PCN#510807

EC NO: 726454
DRWN: LIKITV 2022/10/20
CHK'D: GGA 2022/11/30
APPR: GGA 2022/11/30

INITIAL REVISION:
DRWN: JENCINAS 2012/07/17
APPR: JMACNEIL 2012/09/14

THIRD ANGLE PROJECTION | DRAWING: B-SIZE | SERIES: 38691

molex

8.26/.325 SR TRI-BARRIER
TERMINAL STRIP CS, PC ASSY

PRODUCT CUSTOMER DRAWING

DOCUMENT NUMBER	DOC TYPE	DOC PART	REVISION
SD-38691-004	PSD	001	B1

MATERIAL NUMBER	CUSTOMER	SHEET NUMBER
SEE CHART	GENERAL MARKET	1 OF 1