DRAWING MADE IN THIRD ANGLE PROJECTION

680087 ⇔ 680087

/home/us016926/DMTECmod

PART NUMBER	REV	FIRST USED
680087-1	C	854400-1
680087-2	C	565435-5
680087-3	C	354500-1

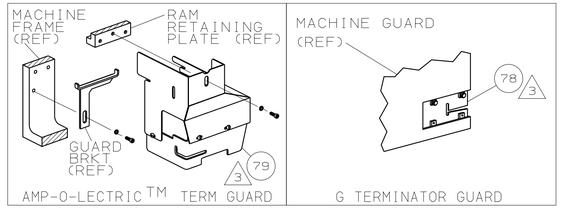

TERMINAL NAME: AUTOM. WIRE-PIN	
	926823
TERM APPL SPEC	NONE

CRIMPING DATA

PAD LTR	CRIMP HEIGHT	WIRE SIZE
A	.061 ±.002	1mm²
B	.057 ±.002	0.75mm²
C	.053 ±.002	0.5mm²
D	NOT	USED

CRIMP	SIZE	TYPE	RANGE
WIRE	.080	F	0.5-1mm²
INSUL	–	–	–

FEED	APPL INST	SET UP GAGE	LAYOUT
.338	408-8039	458638-1	L1570

WIRE STRIP LENGTH .275-.305

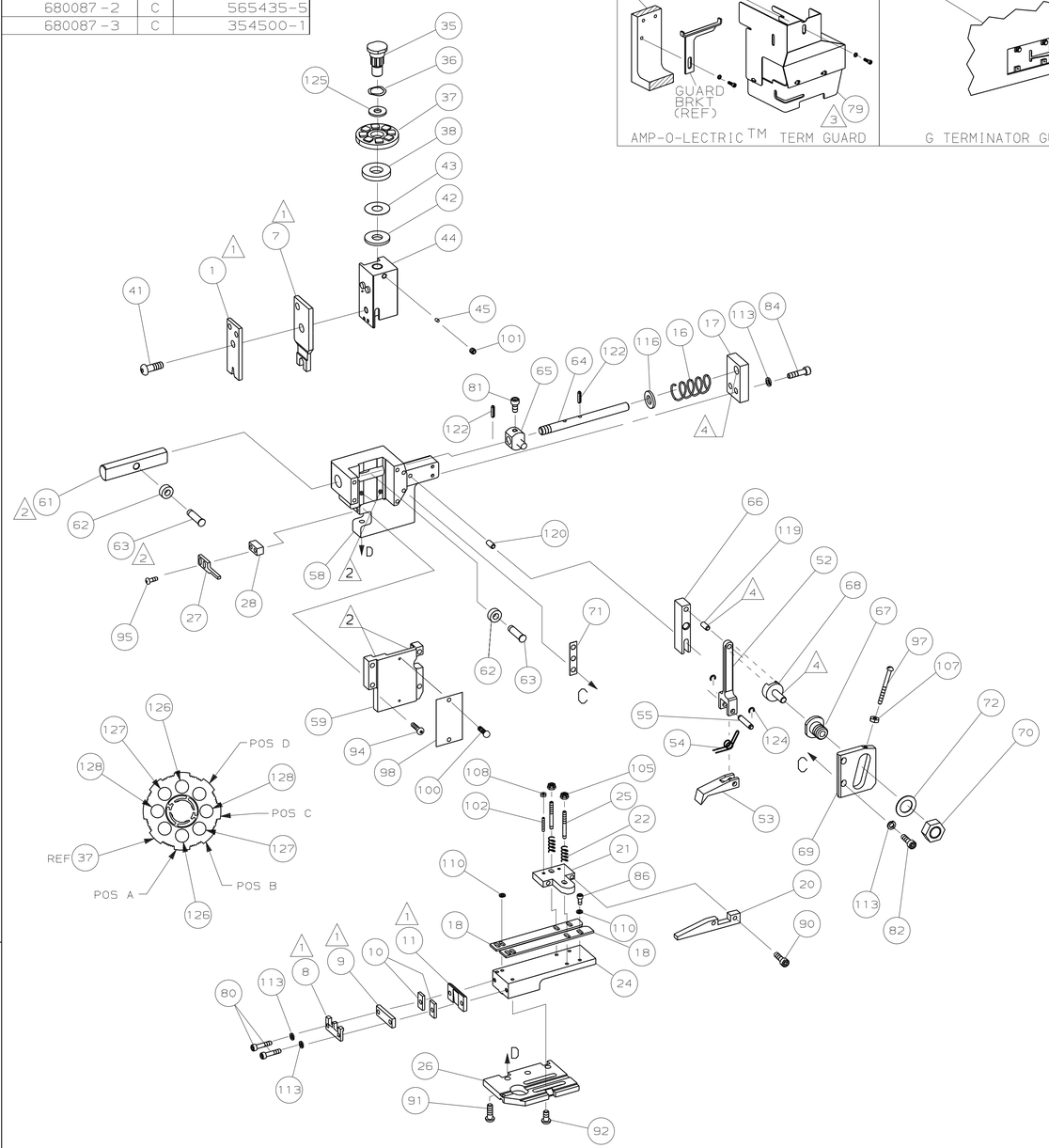

-3	-2	-1	U/M	DWG SIZE	PART NO	DESCRIPTION	ITEM NO
							129
2	2	2	–	C	5-354779-0	PIN, WIRE DISC (.3240)C	128
2	2	2	–	C	4-354779-2	PIN, WIRE DISC (.3200)B	127
2	2	2	–	C	3-354779-4	PIN, WIRE DISC (.3160)A	126
1	1	1	–	A	986950-1	WASHER, FLAT PRECISION	125
2	2	2	–	A	21045-3	RING,RET"C"(ø.187)FD PIN	124
							123
2	2	2	–	A	5-21028-1	PIN,STD SPRING(ø.12)FD ADJ ROD	122
							121
1	1	1	–	A	1-21030-7	PIN,DOWEL(ø.187x1.50)HSG	120
1	1	1	–	A	1-21030-1	PIN,DOWEL(ø.187x.50)LEVER	119
							118
							117
1	1	1	–	A	21899-4	WASHER,FLAT(ø5/16)SCR ADJ	116
							115
							114
6	6	6	–	A	21024-5	WASHER,LOCK(NO.10)SHEAR PL	113
							112
							111
4	4	4	–	A	21024-4	WASHER,LOCK(NO.8)SHEAR BL	110
							109
2	2	2	–	A	21018-4	NUT,HEX(4-40)DRAG	108
1	1	1	–	A	21018-5	NUT,HEX(6-32)FD ADJ PL	107
							106
2	2	2	–	A	21022-2	NUT,HEX SL(8-32)DRAG STUD	105
							104
							103
2	2	2	–	A	4-21078-8	SKT SKT SET (4-40x.75)DRAG	102
1	1	1	–	A	21009-2	SCR,SKT SET(1/4-20x.25)RAM	101
2	2	2	–	A	21017-2	SCR,DRIVE(#2x.19)ID PLATE	100
1	1	1	–	A	1-21002-7	SCR,BHC(6-32x.38)CAM	99
1	1	1	–	B	461264-1	PLATE, IDENTIFICATION	98
1	1	1	–	A	6-23715-5	SCR,PAN HD(6-32x1.50)FEED ADJ	97
							96
2	2	2	–	A	8-21002-9	SCR,BHC(8-32x1.00)STRIPPER	95
4	4	4	–	A	2-21002-9	SCR,BHC(10-32x.75)HSG CAP	94
							93
4	4	4	–	A	3-21002-3	SCR,BHC(1/4-20x.50)ST GD PL	92
3	3	3	–	A	2-22733-8	SCR,BHC(1/4-20x.62)BASE PL	91
2	2	2	–	A	1-21000-3	SCR,SHC(4-40X.25) DRAG	90
							89
							88
							87
4	4	4	–	A	2-21000-5	SCR,SHC(8-32X.25)STRIP GUIDE	86
							85
2	2	2	–	A	3-21000-7	SCR, SKT CAP(10-32x.75)FD GDE	84
							83
2	2	2	–	A	3-21000-6	SCR,SKT CAP(10-32x.62)FD ADJ P	82
1	1	1	–	A	3-21000-4	SCR,SKT CAP(10-32x.38)PIVOT BL	81
2	2	2	–	A	3-21000-9	SCR,SKT CAP(10-32x1.00)SH PL	80
3 –	REF	–	–	A	455745-1	GUARD, WINDOW	79
3 REF	–	–	–	A	679532-1	INSERT, GUARD	78
							77
							76
							75
							74
							73
1	1	1	–	A	458109-1	WASHER, FLAT (SPECIAL)	72
1	1	1	–	A	690517-1	SPACER	71

QTY REQD PER ASSY — REVISION OF EACH ASSY NO (WHEN BLANK, USE DWG REVISION) — PARTS LIST

-1	LEADMAKER	MECH POST FEED
-2	BENCH MODEL K	MECH PRE FEED
-3	BENCH MODEL G	MECH PRE FEED

-3	-2	-1	U/M	DWG SIZE	PART NO	DESCRIPTION	ITEM NO
1	1	1	–	A	22594-8	NUT, HEX	70
1	1	1	–	B	240628-1	PLATE, ADJ	69
1	1	1	–	B	240626-1	SHAFT, PIVOT	68
1	1	1	–	B	240633-1	BUSHING	67
1	1	1	–	A	455680-1	LEVER, INTERMEDIATE	66
1	1	1	–	B	240629-1	BLOCK, PIVOT	65
1	1	1	–	A	240632-2	SCR, ADJ	64
1	1	1	–	B	240659-3	PIN, CAM ROLLER	63
1	1	1	–	B	240658-1	CAM, ROLLER	62
1	1	1	–	B	454398-1	ROD, FEED	61
							60
1	1	1	–	C	454220-1	CAP, RAM	59
1	1	1	–	D	453736-1	HOUSING	58
							57
							56
1	1	1	–	B	240624-1	PIN, FEED FINGER	55
1	1	1	–	B	691499-1	SPRING, FEED FINGER	54
1	1	1	–	B	240635-1	FINGER, FEED	53
1	1	1	–	B	240634-1	LEVER, TERMINAL	52
							51
							50
1	–	–	–	B	690602-6	CAM, PRE-FEED 1 5/8 ST	49
–	1	–	–	B	690602-5	CAM, PRE-FEED 1 1/8 ST	48
–	–	1	–	B	690501-4	CAM, POST-FEED 1 5/8 ST	47
							46
1	1	1	–	A	690191-1	PLUG, NYLON	45
1	1	1	–	C	455674-9	RAM	44
1	1	1	–	A	690125-1	WASHER, LAMINATED	43
1	1	1	–	A	690124-1	WASHER, RAM	42
1	1	1	–	A	7-21002-9	BOLT, CRIMPER(5/16-24x1.00)	41
							40
							39
1	1	1	–	A	690223-2	SPACER, INSULATION DISC	38
1	1	1	–	D	354777-1	WIRE DISC, PLASTIC	37
1	1	1	–	A	22480-5	WASHER, SPRING	36
1	1	1	–	B	690212-1	POST, RAM	35
							34
							33
							32
							31
							30
							29
1	1	1	–	B	4-690451-5	SPACER, STRIPPER	28
1	1	1	–	A	690455-1	STRIPPER	27
1	1	1	–	C	459717-1	PLATE, BASE	26
2	2	2	–	A	22354-8	DRAG, STUD	25
1	1	1	–	B	455678-1	PLATE, STRIP GUIDE	24
							23
2	2	2	–	A	4-22281-1	SPRING, DRAG	22
1	1	1	–	A	464451-1	ARM, DRAG, STOCK	21
1	1	1	–	A	464452-2	DRAG, STOCK	20
			–				19
2	2	2	–	C	454204-2	GUIDE, STRIP (FRONT)	18
1	1	1	–	A	454178-1	GUIDE, FEED ROD	17
1	1	1	–	A	4-22284-9	SPRING, FEED RETURN	16
							15
							14
							13
							12
1 1	1	1	–	B	240644-1	PLATE, REAR SHEAR	11
2	2	2	–	C	240645-3	SPACER, SHEAR PLATE	10
1 1	1	1	–	B	690619-4	PLATE, RETAINING	9
1 1	1	1	–	D	690618-8	ANVIL	8
1 1	1	1	–	B	459722-3	BLADE, SLUG	7
							6
							5
							4
							3
							2
1 1	1	1	–	C	3-459736-4	CRIMPER, WIRE	1

QTY REQD PER ASSY — REVISION OF EACH ASSY NO (WHEN BLANK, USE DWG REVISION) — PARTS LIST

1. RECOMMENDED SPARE PARTS.
2. GREASE LIGHTLY.
3. GUARD MUST BE IN PLACE WHEN OPERATING APPLICATOR IN A BENCH MACHINE.
4. LUBRICATE DAILY USING NO. 20 MACHINE OIL.

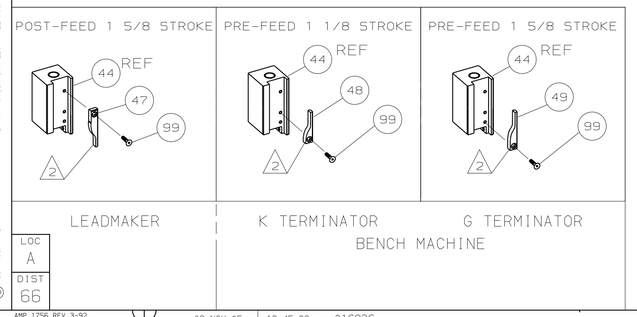

P	F	LTR	REVISION RECORD	APP	DATE
		C	ECR-05-014696	GB	11-05
		B	0150-5817-94	CE	11-94
		A	0150-5545-94	CE	7-94

DIMENSIONS IN INCHES.
DO NOT SCALE PRINT.
TOLERANCES UNLESS OTHERWISE SPECIFIED:
2 PLC DEC ±-
3 PLC DEC ±-
4 PLC DEC ±-
ANGLES ± -
SURF TEXTURE: √
REMOVE BURRS, BREAK SHARP EDGES R.015 MAX

MATL – HT TR – FIN –

DR 5/3/94 JC BAKER | APP 5/5/94 A. BEDDICK | CHK 5/5/94 C. ERISMAN | REL 5/10/94 B. MORGAN

AMP Incorporated, Harrisburg, PA 17105-3608

NAME END FEED HDM APPLICATOR | MACHINE REF MINI APPL

SCALE – | D | DWG NO 680087 | SHEET 1 OF 1 | REV C

CAGE CODE 00779 | CUSTOMER AND ASSEMBLY DRAWING | RESTRICTED TO

THIS DRAWING IS A CONTROLLED DOCUMENT.
THIS DRAWING IS UNPUBLISHED. © COPYRIGHT 19 BY AMP INCORPORATED. ALL RIGHTS RESERVED. RELEASED FOR PUBLICATION: ,19

LOC A | DIST 66

AMP 1756 REV 3-92 | 02-NOV-05 | 12:45:36 us016926

8 7 6 5 4 3