ASSEMBLY P/N	TOTAL NUMBER OF SIGNAL CONTACTS	DIM "A"	DIM "B"	DIM "H"	PACKAGING SPECIFICATION
73770-0109	72	27.6	22.00	15.05	PK-70873-1873
73770-0209	72	27.6	22.00	6.05	PK-70873-0875
73770-0309	72	27.6	22.00	10.05	PK-70873-0871
73770-1109	144	51.6	46.00	15.05	PK-70873-1873
73770-1209	144	51.6	46.00	6.05	PK-70873-0875
73770-1309	144	51.6	46.00	10.05	PK-70873-0871

NOTES:
1. MATERIALS: HOUSING-LIQUID CRYSTAL POLYMER (LCP), GLASS-FILLED UL 94V-0, COLOR: BLACK, TERMINAL: PHOSPHOR BRONZE
2. FINISH: SELECTIVE GOLD (AU) IN CONTACT AREA, 0.76 MICROMETER MINIMUM THICKNESS; SELECTIVE TIN (Sn) ON TAILS, 0.38 MICROMETER MINIMUM THICKNESS; NICKEL (Ni) UNDERPLATE OVERALL.
3. THIS PART CONFORMS TO MOLEX PRODUCT SPECIFICATION: PS-73780-999.
4. DIMENSIONS ARE IN MILLIMETERS
5. RECOMMENDED PCB THICKNESS: 2.50 MINIMUM
6. SEE TABLE FOR PACKAGING SPECIFICATION.
7. PART MARKED WITH PART NUMBER AND DATE CODE APPROXIMATELY WHERE SHOWN.

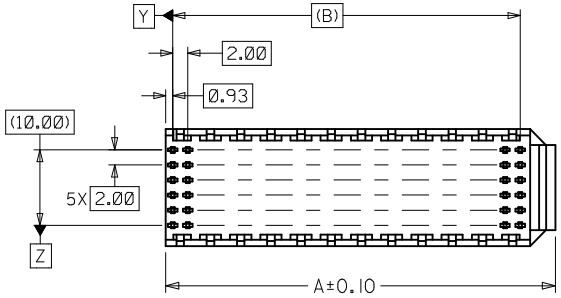

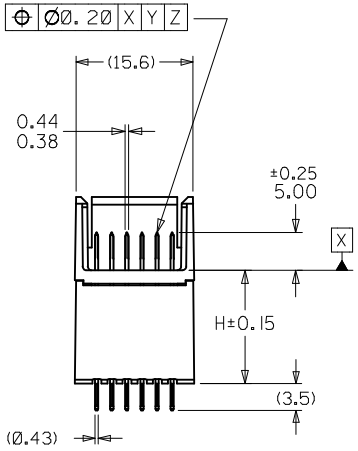

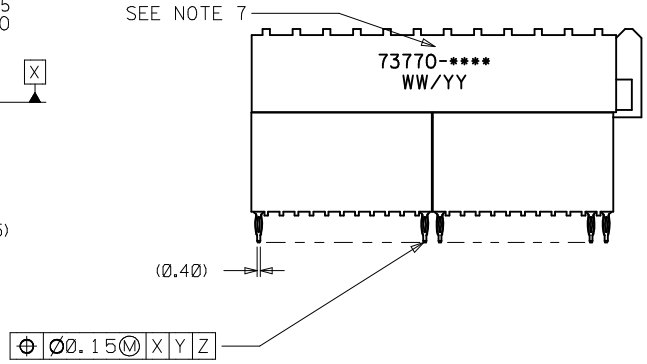

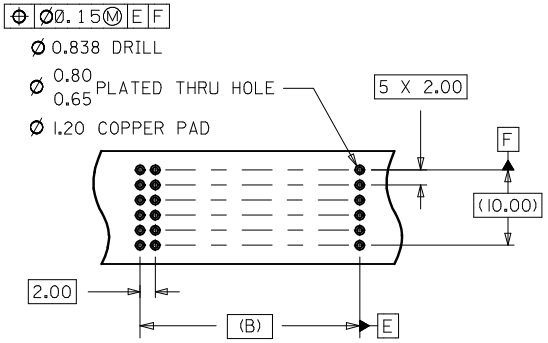

BACKPLANE HOLE PATTERN

CHG 15mm PKG EC NO: UCP2013-1282 DRWN:DMORGAN 2012/10/01 CHKD: APPR:SMILLER 2012/10/02 DESCRIPTION	QUALITY SYMBOLS =0 =0 =0	GENERAL TOLERANCES (UNLESS SPECIFIED) mm / INCH 4 PLACES ± --- / ± --- 3 PLACES ± --- / ± --- 2 PLACES ± 0.05 / ± --- 1 PLACE ± 0.10 / ± --- 0 PLACE ± --- / ± --- ANGULAR ±1/2° DRAFT WHERE APPLICABLE MUST REMAIN WITHIN DIMENSIONS	DIMENSION STYLE MM ONLY DRAWN BY MIBARRA DATE 05/07/06 CHECKED BY BSMART DATE 05/07/06 APPROVED BY SMILLER DATE 2012/09/18 MATERIAL NO. SEE TABLE SIZE C	SCALE DESIGN UNITS METRIC THIRD ANGLE PROJECTION TITLE SALES ASSY HDM BACKPLANE STACKING MODULE CLOSED END OPTION PRESSFIT molex DOCUMENT NO. SD-73770-002 SHEET NO. 1 OF 1	
B1 REV				THIS DRAWING CONTAINS INFORMATION THAT IS PROPRIETARY TO MOLEX INCORPORATED AND SHOULD NOT BE USED WITHOUT WRITTEN PERMISSION	