LC QUAD ADAPTER P/N	LC QUAD ADAPTER COLOR	SPLIT SLEEVE MATERIAL
106123-0100	BLUE	ZR
106123-1100	BEIGE	ZR
106123-2100	GREEN	ZR
106123-3100	AQUA	ZR

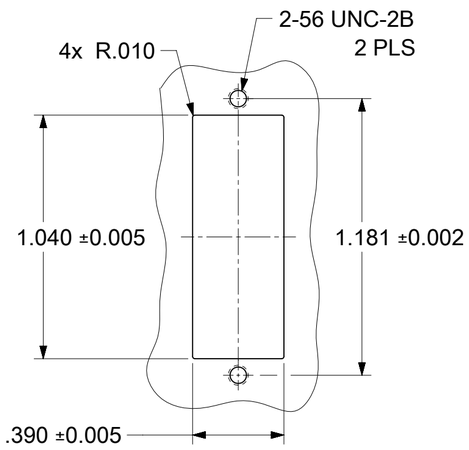

RECOMMENDED
MOUNTING PATTERN
SCALE 2:1

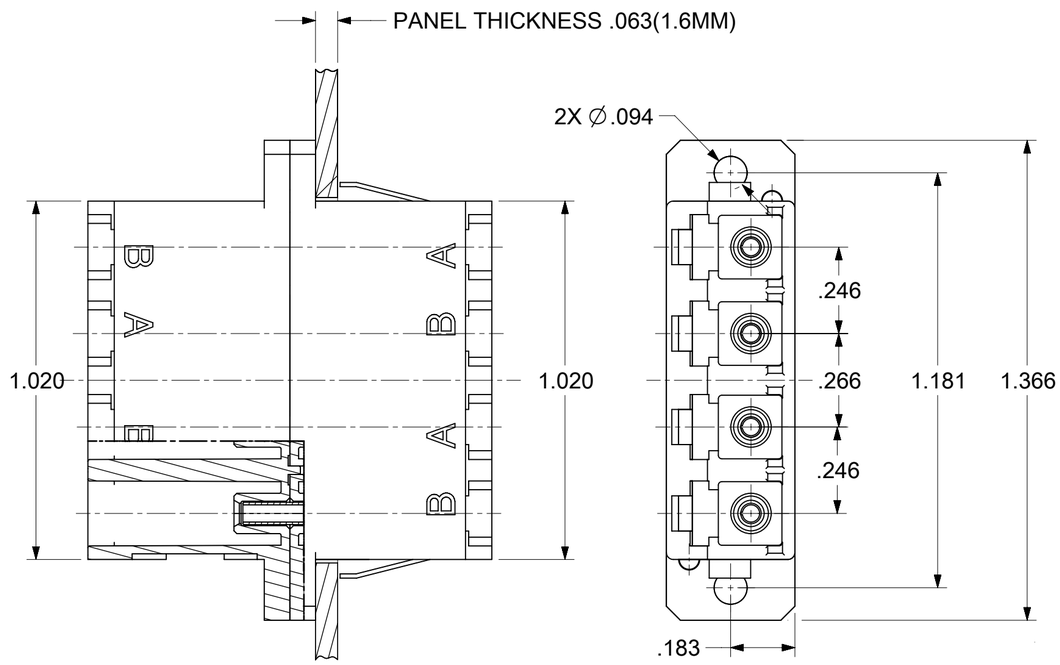

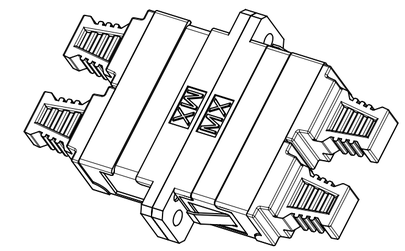

ISO VIEW 2
SCALE 1.5:1

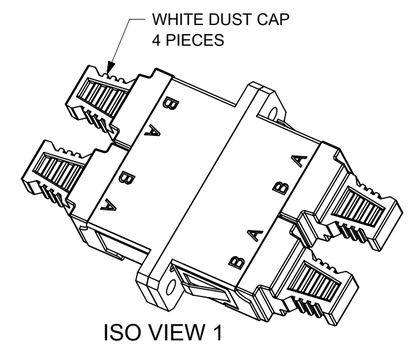

ISO VIEW 1
SCALE 1.5:1

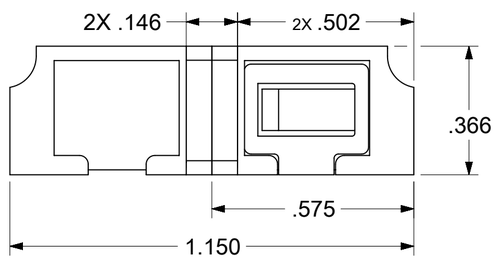

NOTES:

1. ALL DIMENSIONS ARE FOR REFERENCE.

2. DUST CAPS NOT SHOWN ON FRONT, BOTTOM AND RIGHT VIEW.

3. LC QUAD ADAPTER HAS SC DUPLEX ADAPTER FOOTPRINT.

PRE-RELEASE REFERENCE USE ONLY

THIS DRAWING CONTAINS INFORMATION THAT IS PROPRIETARY TO MOLEX ELECTRONIC TECHNOLOGIES, LLC AND SHOULD NOT BE USED WITHOUT WRITTEN PERMISSION

FUNCTIONAL SYMBOLS: FA = 0, FC = 0, FP = 0
DIVISIONAL SYMBOLS

DIMENSION UNITS: INCH
SCALE: 3:1

GENERAL TOLERANCES (UNLESS SPECIFIED)

ANGULAR TOL	± °
4 PLACES	±
3 PLACES	±
2 PLACES	±
1 PLACE	±
0 PLACES	±

DRAFT WHERE APPLICABLE MUST REMAIN WITHIN DIMENSIONS

CURRENT REV DESC:

EC NO: 691076
DRWN: JHUANG18 2022/01/12
CHK'D: IGUMIN 2022/01/13
APPR: IGUMIN 2022/01/13

INITIAL REVISION:
DRWN: PGIBLIN 2005/12/06
APPR: IGUMIN 2005/12/06

THIRD ANGLE PROJECTION | DRAWING: C-SIZE | SERIES: 106123

molex

LC QUAD ADAPTER
(SCREW AND SNAP MOUNT)

PRODUCT CUSTOMER DRAWING

DOCUMENT NUMBER	DOC TYPE	DOC PART	REVISION
SD-106123-X100	PSD	001	B1

MATERIAL NUMBER	CUSTOMER	SHEET NUMBER
SEE TABLE	GENERAL MARKET	1 OF 1

DOCUMENT STATUS		RELEASE DATE	

FORMAT: master-tb-prod-C
REVISION: J1
DATE: 2021/05/01