MATERIAL NO.	ENGINEERING NO.	WIRE AWG	LENGTH	USB RECEPT.	GASKET SEAL	
					MATERIAL	COLOR
847290001	84729-0001	28	6.0 IN +.5/-0	847010050	NEOPRENE	BLACK
847290002	84729-0002	20	6.0 IN +.5/-0	847010067	NEOPRENE	BLACK
847290015	84729-0015	20	1100mm +25.4/-0	847010072	NEOPRENE	BLACK
847290019	84729-0019	20	200mm +25.4-0	847010073	NEOPRENE	BLACK
847290023	84729-0023	28	9.0 IN +.5/-0	847010075	NEOPRENE	BLACK
847290029	84729-0029	28	6.0 IN +.5/-0	847010050	SILICONE	RED

CHART

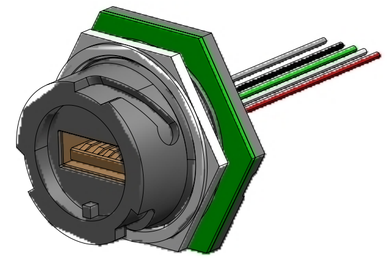

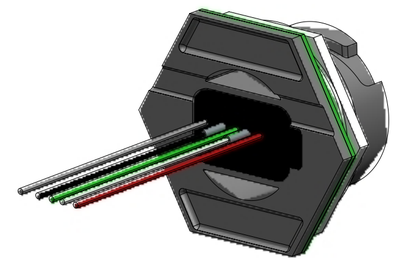

1. MATERIALS: SEE TABLE
2. FINISHES: SEE TABLE
3. ELECTRICAL SPECS:
   VOLTAGE: 30V
   CURRENT: 1.0A
4. MAX PANEL THICKESS: .10
5. PANEL NUT TORQUE: 24 ±4 IN. LBS
6. DIMS SHOWN ARE FOR REFERENCE UNLESS NOTED OTHERWISE
7. PRODUCT SPEC: PS-84727-002

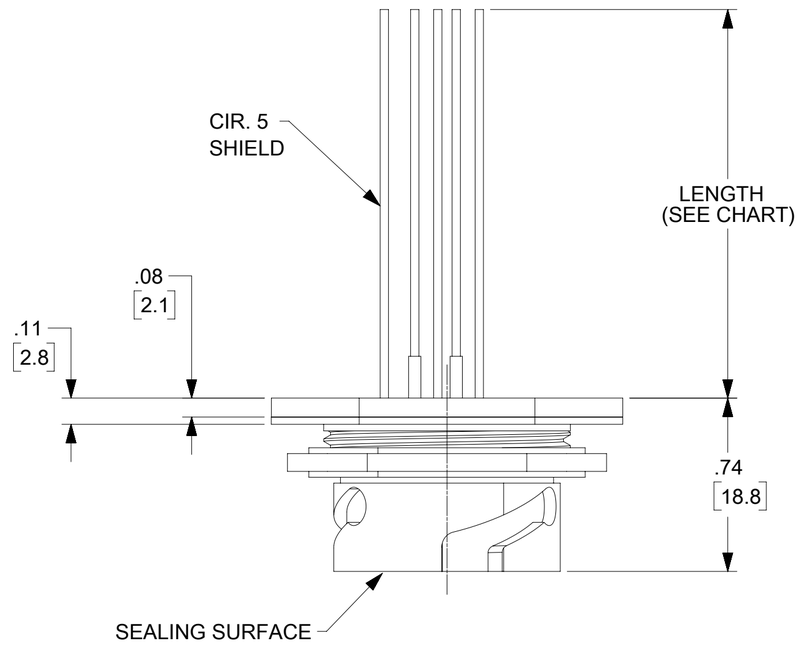

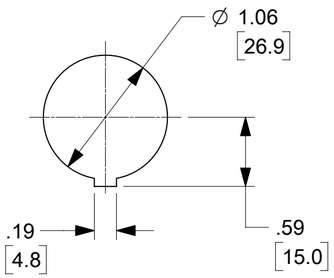

REF. PANEL CUTOUT
SCALE: 1X

1	RED	
2	WHITE	
3	GREEN	
4	BLACK	
USB SHELL 5	GRAY	

WIRING DIAGRAM

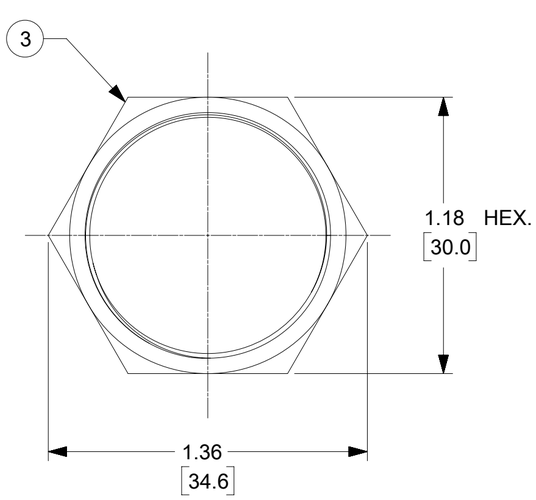

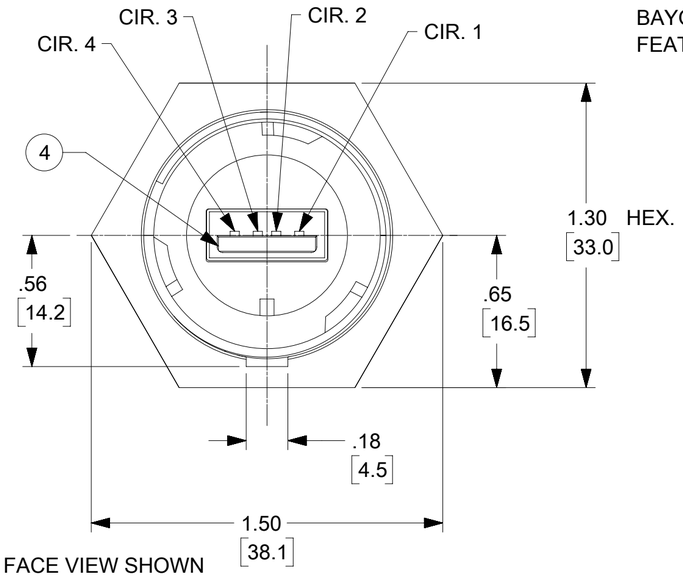

FACE VIEW SHOWN
WITHOUT LOCKNUT
OR GASKET SEAL

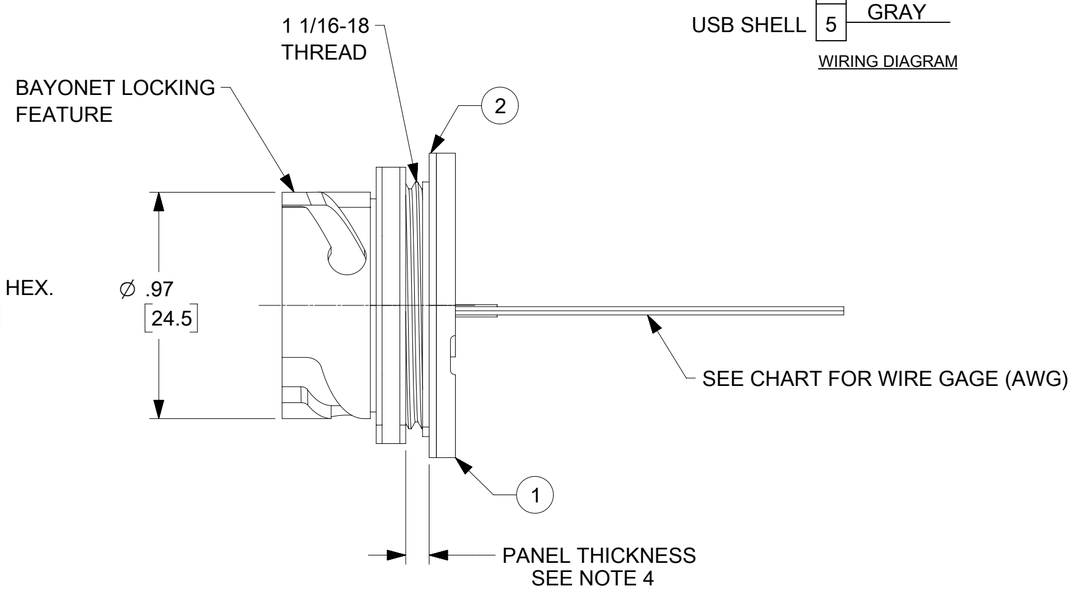

TABLE

4	USB-A RECEPTACLE	Cu ALLOY	GOLD PLTD CONTACTS
3	LOCKNUT	NYLON	BLACK
2	GASKET SEAL	NEOPRENE	BLACK
1	USB RECEPTACLE, PANEL MOUNT	PBT	BLACK
ITEM	DESCRIPTION	MATERIAL	FINISH

QUALITY SYMBOLS: FA = 0; FC = 0; FP = 0; ▼ = 0; C = 0; ☒ = 0; ■ = 0; C = 0

THIS DRAWING CONTAINS INFORMATION THAT IS PROPRIETARY TO MOLEX ELECTRONIC TECHNOLOGIES, LLC AND SHOULD NOT BE USED WITHOUT WRITTEN PERMISSION

EC NO: 114072 — MIGRATE TO NX
DRWN: RSTONE — 2017/06/06
CHK'D: BRUPERT — 2017/07/19
APPR: BWOODMAN — 2017/09/06
REV: F1

GENERAL TOLERANCES (UNLESS SPECIFIED)

	MM	INCH
4 PLACES	±	±
3 PLACES	±	±
2 PLACES	±	±
1 PLACES	±	±
0 PLACES	±	±
ANGULAR TOL ±		

DRAFT WHERE APPLICABLE MUST REMAIN WITHIN DIMENSIONS

DIMENSION UNITS: INCH
SCALE: 2:1
DRWN BY: R. STONE — DATE: 2005/12/06
CHK'D BY: R. DEROSS — DATE: 2006/01/05
APPR BY: R. DEROSS — DATE: 2006/01/05
DRAWING SIZE: C
THIRD ANGLE PROJECTION

molex®

USB-A RECEPTACLE, PANEL MOUNT
BAYONET LOCK, WITH WIRES

PRODUCT CUSTOMER DRAWING

SERIES	MATERIAL NUMBER	CUSTOMER
84729	SEE CHART	GENERAL MARKET

DOCUMENT NUMBER	DOC TYPE	DOC PART	SHEET NUMBER
SD-84729-005	PSD	000	1 OF 1

RELEASE STATUS | RELEASE DATE

FORMAT: Eng-tega-master-tb-prod-C
REVISION: C
DATE: 2017/02/06