THIS DRAWING IS UNPUBLISHED. RELEASED FOR PUBLICATION -
© COPYRIGHT copyright_dgte- ALL RIGHTS RESERVED.

REVISIONS

P	LTR	DESCRIPTION	DATE	DWN	APVD
	A	INITIAL RELEASE	08JUN16	F.P	P.W
	A1	ECR-18-004841	04MAY18	F.P	W.W
	A2	ECR-19-019964	24DEC19	B.Z	W.W

CODINGS

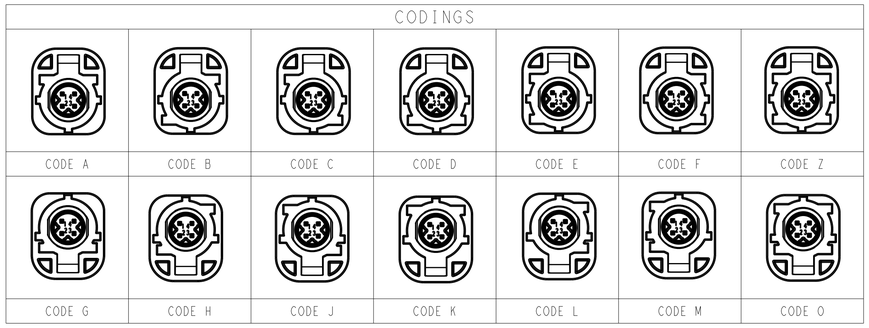

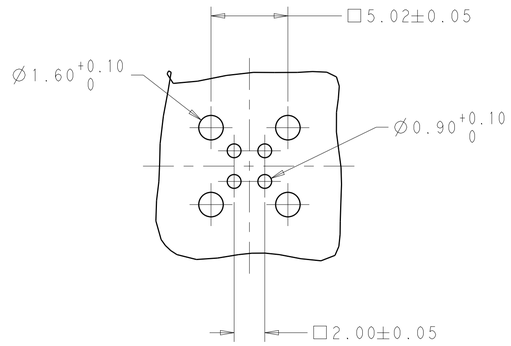

RECOMMENDED PCB LAYOUT

NOTES

1 DETAILS OF DESIGN ARE LEFT TO TE CONNECTIVITY

2 HSD INTERFACE ACC. TO TE SPEC. 114-18950

3 PACKAGING: TAPE AND REEL

4 MARKING OF 100% TEST PASSED

5 FITS WITH HSD CONNECTOR 90 DEG. TE PN X-2208145-X
AND HSD CONTACT 90 DEG. TE PN 2236774-1...-3 OR
HSD CONNECTOR 180 DEG TE PN X-1823898-X
AND HSD CONTACT 180 DEG. TE PN 2236772-1

6 ALL DIMENSIONS IN BRACKETS () FOR INFORMATION ONLY

7 .AREA OF VACUUM PICKUP

WEIGHT [g]: 3

AS SHOWN CODING Z

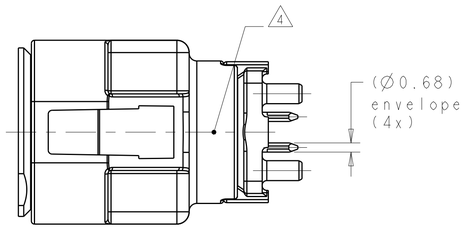

SCALE 2:1

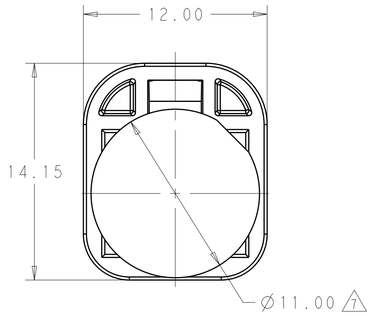

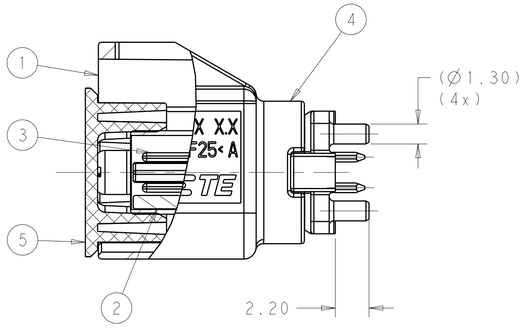

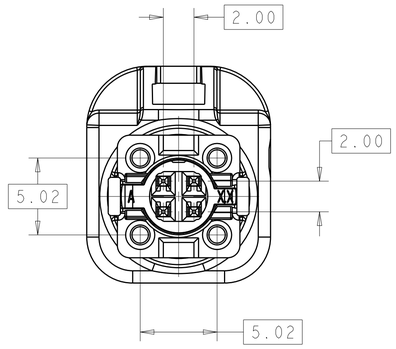

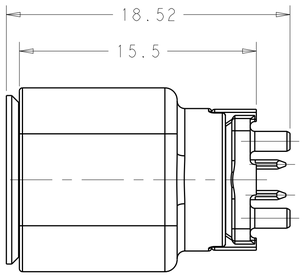

QUANTITY														CODE	DESCRIPTION	MATERIAL	FINISH COLOR, SIMILAR RAL	ITEM NO.
													1		PICK-UP CAP	NYLON	BLACK	5
													1		SHIELDING BODY	Zn ALLOY	INTERFACE SIDE: TIN PLATING 3µm MIN. SOLDER SIDE: TIN PLATING 3µm MIN	4
													4		CONTACT PIN	CuSn4	SOLDER SIDE: TIN PLATING 3µm MIN. INTERFACE SIDE: GOLD PLATING 0.8µm MIN.	3
													1		CAVITY BLOCK	LCP	BLACK	2
														1	O	CODING COVER	PA6T/6 -GF25	LIGHT GREEN / 6027	1
												1			M			PASTEL ORANGE / 2003
											1				L			YELLOW GREEN / 6048
										1					K			CURRY / 1027
									1						J			BEIGE / 1001
								1							H			HEATHER VIOLET / 4003
							1								G			BLUISH GREY / 7031
						1									Z			WATER BULE / 5021
					1										F			NUT BROWN / 8011
				1											E			LEAF GREEN / 6002
			1												D			CLARET VIOLET / 4004
		1													C			SIGNAL BLUE / 5005
	1														B			CREAM WHITE / 9001
1															A			JET BLACK / 9005

0-1	0-2	0-3	0-4	0-5	0-6	0-9	1-1	1-2	1-3	1-4	1-5	1-6	1-9	
A	B	C	D	E	F	Z	G	H	J	K	L	M	O	ASSY CODE
A	A	A	A	A	A	A	A	A	A	A	A	A	A	REVISION

ASSY NO. X-2304935-Y

THIS DRAWING IS A CONTROLLED DOCUMENT.

DIMENSIONS: mm

TOLERANCES UNLESS OTHERWISE SPECIFIED:
0 PLC ±-
1 PLC ±0.5
2 PLC ±0.5
3 PLC ±-
4 PLC ±-
ANGLES ±-

MATERIAL - -

FINISH - -

DWN F.PAN 08JUN2016
CHK P.WU 08JUN2016
APVD L.YIN 08JUN2016

PRODUCT SPEC 108-101388
APPLICATION SPEC 114-32195
WEIGHT -

TE Connectivity

NAME HSD HEADER 180DEG 4POS. ASSY. WITH PICKUP CAP

SIZE A1 | CAGE CODE - | DRAWING NO C-2304935 | RESTRICTED TO -

Customer Drawing | SCALE 5:1 | SHEET 1 OF 1 | REV A2

4805 (3/13)