ITEM NO.	PART NUMBER	DESCRIPTION	QTY.	COMPONENT NOTES
1	50-00027	Connector, dc jack, 5.5x2.5xL17.4 mm, molding style	1	
2	30-00007	Wire, 2C BC, 18 AWG, UL2468, 300V, 80C, 4.4 mm, VW-1, PVC, 87A	1	
3	24-00004	Overmold, PVC	1	black
4	24-00251	Overmold, strain relief, 7x5x2.5 mm bushing, 18 AWG, UL2468 wire	1	black

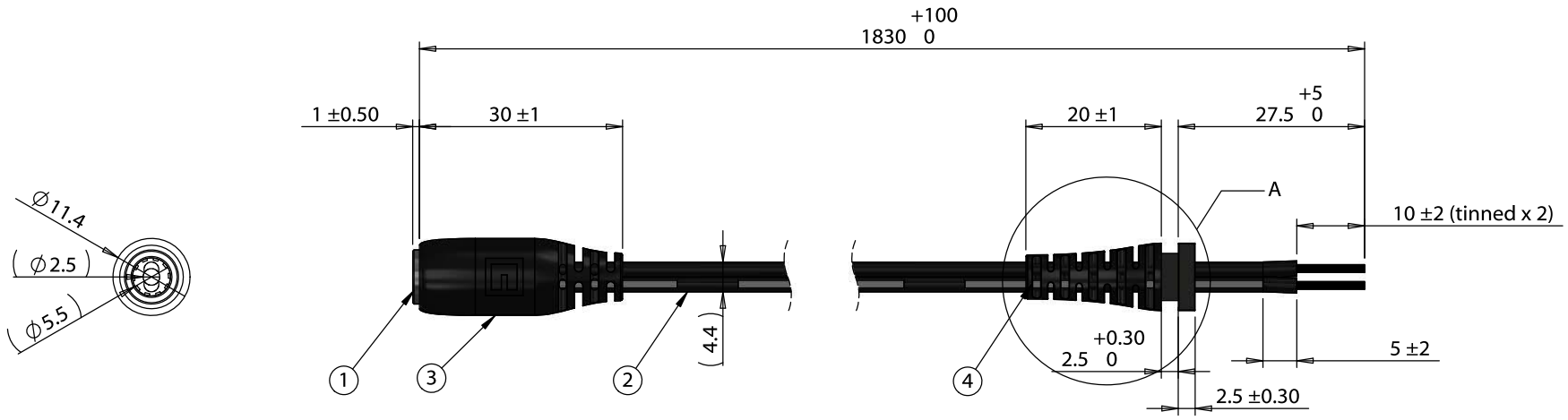

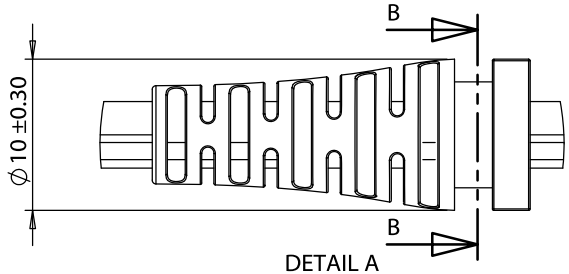

DETAIL A
SCALE 2 : 1

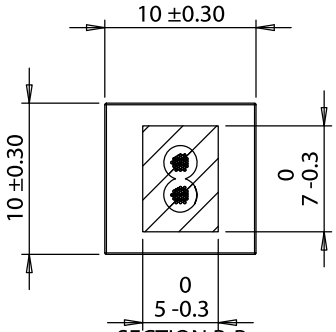

SECTION B-B
SCALE 2 : 1

Notes:
Functionally equivalent components may be substituted

Wiring Diagram	
50-00027	wire color
center	black with stripe
sleeve	black

Revision:	Date:	Description:
A	03/28/2018	Initial release

Prepared: PS Digitally signed by PS Date: 2018.04.06 15:21:55 -07'00'

Verified: JP Digitally signed by JP Date: 2018.04.09 15:06:51 -07'00'

Dimensions are in millimeters.
Tolerances:
X: ± 0.5 mm
X.X: ± 0.3 mm
X.XX: ± 0.05 mm

Notes:

RoHS compliant

Function test: no open, no short circuit, no intermittent

Description:

Cable, 1830 mm, 5.5x2.5 mm 50-00027 dc jack to strain relief 10 mm tinned, 18 AWG, UL2468 wire

TENSILITY
tel 1.541.323.3228 800 877.670.7118
fax 1.541.323.4202 web tensility.com

Size: A
Part number: 10-02957
Scale: 1:1
Sheet 1 of 1

To see a custom version of this cable assembly, call Tensility at 541-323-3228 or email engineering@tensility.com

5 4 3 2 1