RECOMMENDED LAND PATTERN :
Zone A must be attached to heat sink. Thermal conductivity of intermediate layers between Zone A and heat sink must be better than 0.1 W / [°C x mm].

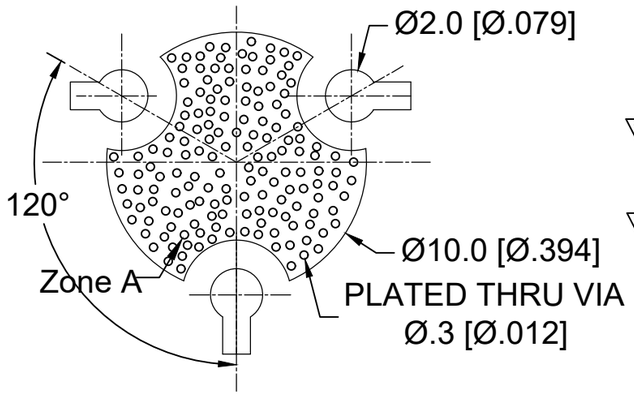

PCB Material :Rogers RO4350B,0.508mm thickness
trace width 1.07mm wide.

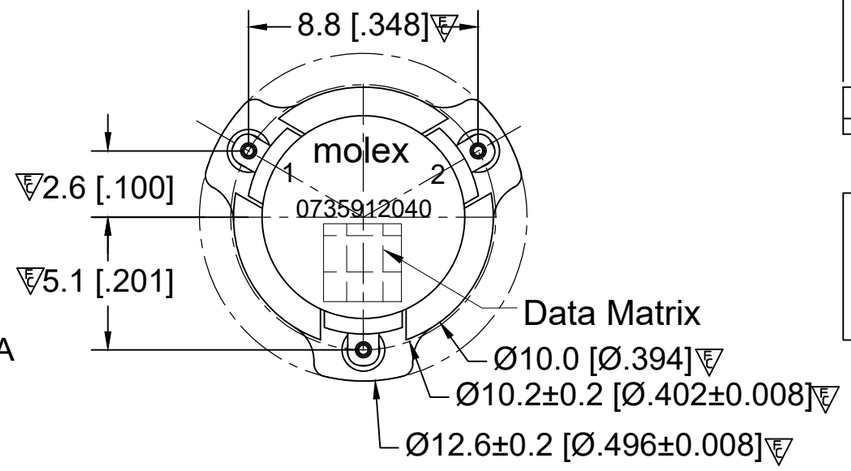

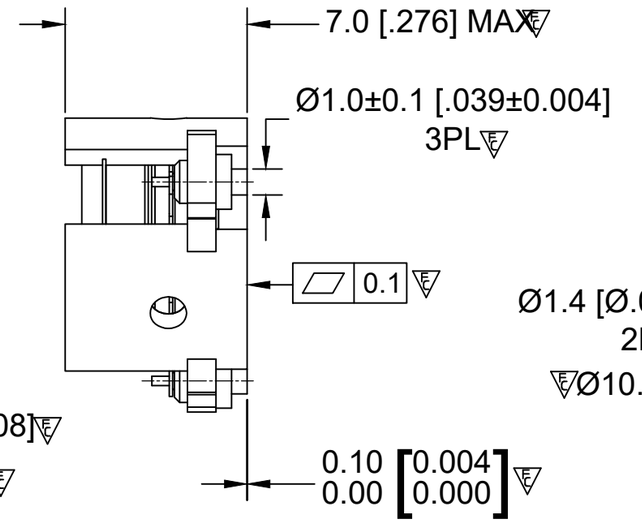

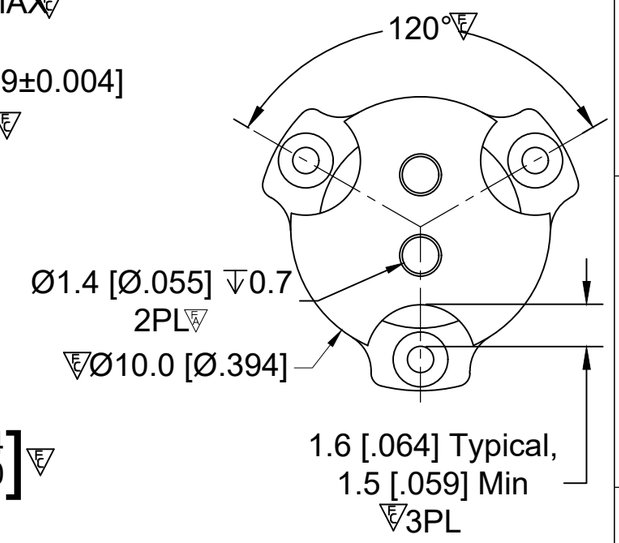

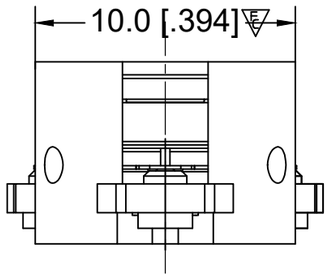

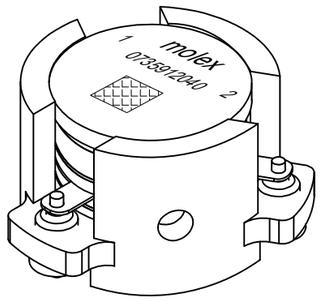

BODY: CARBON STEEL, SILVER PLATED
RIGID PINS: COPPER, SILVER PLATED
NOTES:
1.STANDARD INPUT/OUTPUT IMPEDANCE 50 Ohm
2.LEAD FREE, NO Nd MATERIAL, BeO FREE
3.THE DIMENSION OF DATE MATRIX IS 3X3MM INFORMATION INCLUDING WORK ORDER NUMBER-SERIAL NUMBER-MATERIAL NUMBER
4.THIS PART COMPLIES WITH ALL RoHS REQUIREMENTS

ELECTRICAL SPECIFICATIONS :

Frequency Range	: 3400~3800 MHz
Insertion Loss	: 0.30 dB max
Isolation	: 20 dB Min
Return Loss	: 20 dB min
Power	: 20W
Peak Power	:150W
FWD IMD3 (2x5W)	: -60 dBc Max
Operating Temperature	: -40°C to +105°C
Direction	: CW

ENG PART#:802-340-380-VP040

THIS DRAWING CONTAINS INFORMATION THAT IS PROPRIETARY TO MOLEX ELECTRONIC TECHNOLOGIES, LLC AND SHOULD NOT BE USED WITHOUT WRITTEN PERMISSION

FUNCTIONAL SYMBOLS: A=0, C=0, P=0
DIVISIONAL SYMBOLS

DIMENSION UNITS	SCALE
MM	1:1

GENERAL TOLERANCES (UNLESS SPECIFIED)

	mm	INCH
4 PLACES	±0.005	±----
3 PLACES	±0.025	±----
2 PLACES	±0.13	±----
1 PLACE	±0.2	±----
0 PLACES	±0.4	±----
ANGULAR TOL ± 1.5 °		

DRAFT WHERE APPLICABLE MUST REMAIN WITHIN DIMENSIONS

CURRENT REV DESC: RELEASE TO PROD
EC NO: 696580
DRWN: SREN05 2022/02/21
CHK'D: JLI252 2022/02/23
APPR: HWANG186 2022/03/01
INITIAL REVISION:
DRWN: SREN05 2021/11/12
APPR: HWANG186 2022/03/01

THIRD ANGLE PROJECTION | DRAWING: A3-SIZE | SERIES: 73591

molex

SMSJ CIRCULATOR/3400~3800 MHZ/CW

RESTRICTED PRODUCT CUSTOMER DRAWING

DOCUMENT NUMBER	DOC TYPE	DOC PART	REVISION
735912040	PSD	000	A

MATERIAL NUMBER	CUSTOMER	SHEET NUMBER
0735912040	CUSTOM PART	1 OF 1

DOCUMENT STATUS	P1	RELEASE DATE	2022/03/01 06:07:01

FORMAT: ACAD-tb-prod-A3
REVISION: B
DATE: 2020/01/14