THIS DRAWING IS UNPUBLISHED. RELEASED FOR PUBLICATION 2016
© COPYRIGHT 2008 BY - ALL RIGHTS RESERVED.

REVISIONS

P	LTR	DESCRIPTION	DATE	DWN	APVD
	A	NEW DRAWING	06MAY2016	VGP	SR
	A1	DIMENSION ID ADDED	24MAY2016	VGP	SR
	A2	PCB LAYOUT ADDED	09NOV2022	MBK	SR

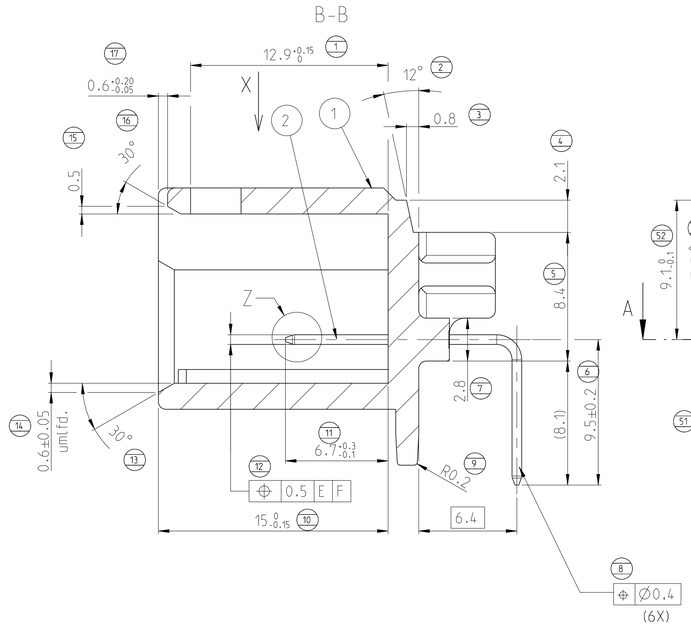

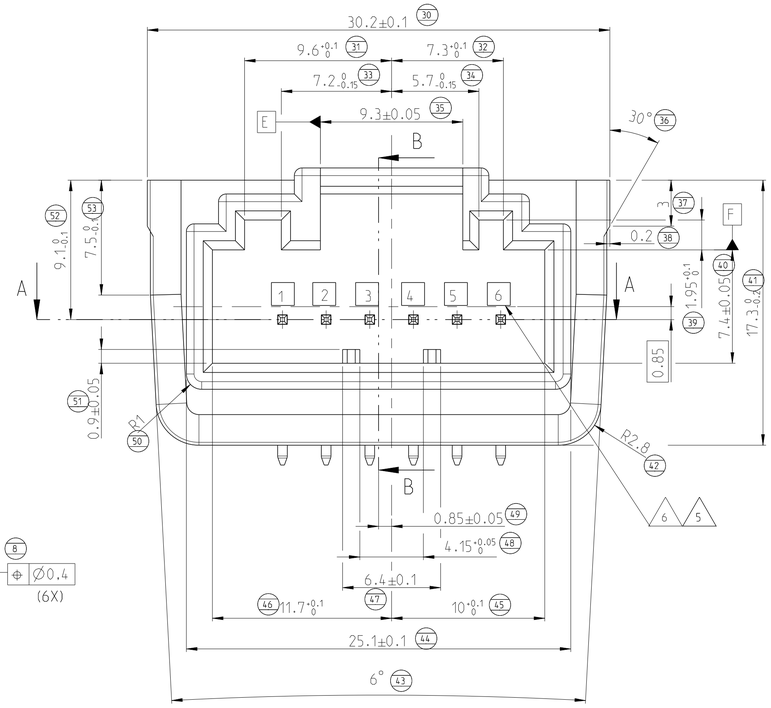

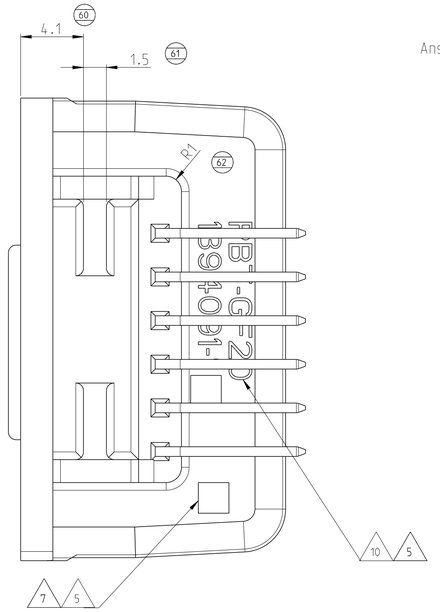

Ansicht X

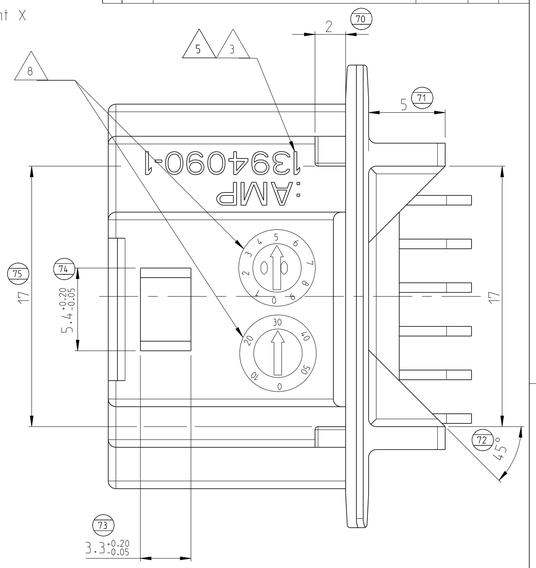

Z
10:1

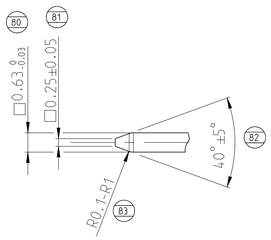

A-A

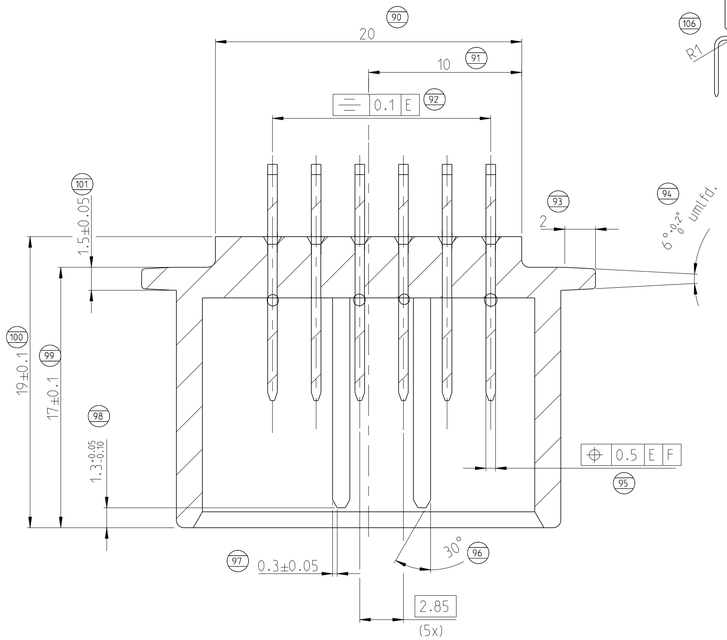

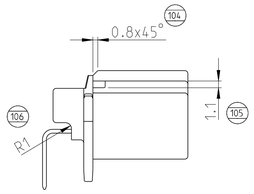

2:1

Bemerkungen
NOTES

1. Nicht bemasste Radien 0.5
   RADII NOT SPECIFIED 0.5
2. unbemasste Wandstaerke 1.7 +0.1mm
   WALL THICKNESS 1.7 +0.1mm UNLESS OTHERWISE SPECIFIED
3. AMP-Zeichen und Nummer
   AMP-TRADE MARK AND NUMBER
4. -
   -
5. Mittelschrift (DIN 1451) Schrifthoehe 1.5 ; 0.3 vertieft
   LETTERS: MEDIUM SIZE 1.5 DIN 1451 ; DEEP 0.3
6. Kammernummern
   CAVITY NUMBERS
7. Nestmarkierung
   MOULD IDENTIFICATION
8. Produktionsdatumuhr
   PRODUCTION DATE CLOCK
9. Kontaktstifthaltekraft F >= 30N
   PIN RETENTION FORCE F >= 30N
10. Materialkennzeichnung
    MATERIAL IDENTIFICATION
11. 1 - 3µm Sn ueber 1.3 - 2.2µm Ni
    1 - 3µm Sn ueber 1.3 - 2.2 µm Ni
12. passend zu PN 1241130-1 (VW) oder 1355082-1 (neutral)
    MATED WITH PN 1241130-1 (VW) OR 1355082-1

A2 RECOMMENDED PCB LAYOUT
Empfohlenes Leiterplattenanschlus

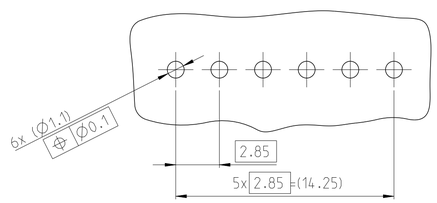

PART. NO	COLOUR/FINISH	MATERIAL	DESCRIPTION	ITEM
1394090-1	11	Cu Mg 0.1	Kontaktstift	2
	Schwarz	PBT GF20	Gehaeuse	1

THIS DRAWING IS A CONTROLLED DOCUMENT.
DIMENSIONS: mm
TOLERANCES UNLESS OTHERWISE SPECIFIED: DIN 16901-130
0 PLC ± 1 PLC ± 2 PLC ± 3 PLC ± 4 PLC ± ANGLES ±1°
MATERIAL: SEE TABLE
FINISH: SEE TABLE

DWN V G Patil 06MAY2016
CHK S Reichel 09MAY2016
APVD -
PRODUCT SPEC -
APPLICATION SPEC -
WEIGHT -

TE Connectivity

NAME: 6 POS. MQS PINHEADER
6 pol. MQS Stiftwanne
-

SIZE A1 | CAGE CODE 00779 | DRAWING NO C-1394090 | RESTRICTED TO -

CUSTOMER DRAWING | SCALE 5:1 | SHEET 1 OF 1 | REV A2

4805 (3/13)