THIS COPY IS PROVIDED ON A RESTRICTED BASIS AND IS NOT TO BE USED IN ANY WAY DETRIMENTAL TO THE INTERESTS OF PANDUIT CORP.

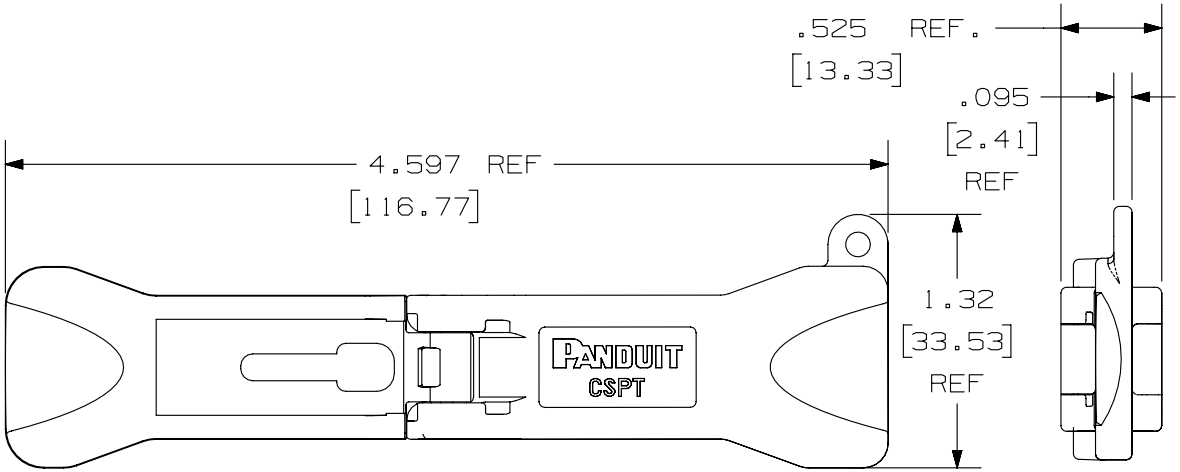

PANDUIT P/N	WEIGHT
CSPT	.28 LB/10 PCS (127.0 g/10 PCS)

NOTES:
1. SEE CURRENT CATALOG FOR PACKAGE QUANTITY.
2. SEE CATALOG FOR COMPLETE LIST OF PARTS APPLICABLE FOR USE WITH THIS PART.
3. DIMENSIONS IN [ ] ARE IN METRIC.

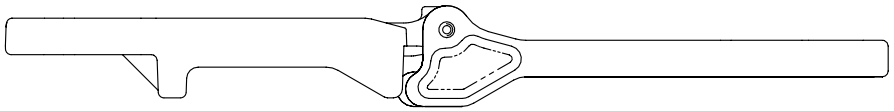

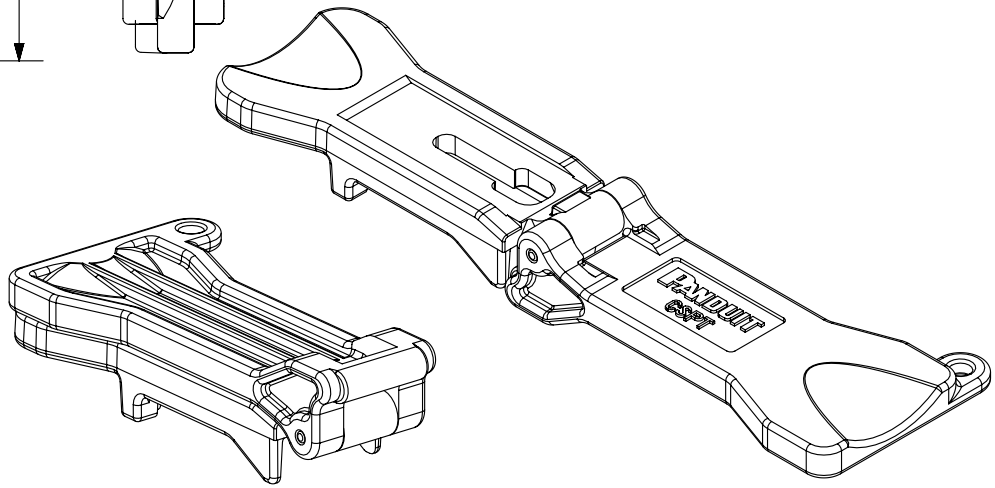

PART NUMBER: CSPT

TITLE: TX6 MODULAR PLUG TERMINATION TOOL

CUSTOMER DRAWING

ITEM REVISION NAME: M01558BA/00

DATASET FILE NAME: M01558BA_DC01/00B

PANDUIT

UNLESS OTHERWISE SPECIFIED, DIMENSIONAL TOLERANCES ARE: IN [mm]

.X ± .XXX ± .010 [.3]

.XX ± .03[.8] ANGLES ±

THIRD ANGLE PROJECTION

MATERIAL: 20% GLASS FILLED NYLON.

DRAWING NUMBER: 01558-01

DRAWN BY	DATE	CHK	SCALE	SHT 1 OF 1	SIZE
MDJR	11-19-02	PBD	NONE		A

REV	DATE	BY	CHK	APR	DESCRIPTION	ECN
1	1-25-08	JSP	REFR	EJH	A. REVISED DRAWING TITLE BLOCK.	01558-01
R	1-25-08	MDJR	PBD	RMD	RELEASED TO PRODUCTION	01558-01

D10100DA/14