29-60-09
10 WATT HALOGEN SOCKET LAMP

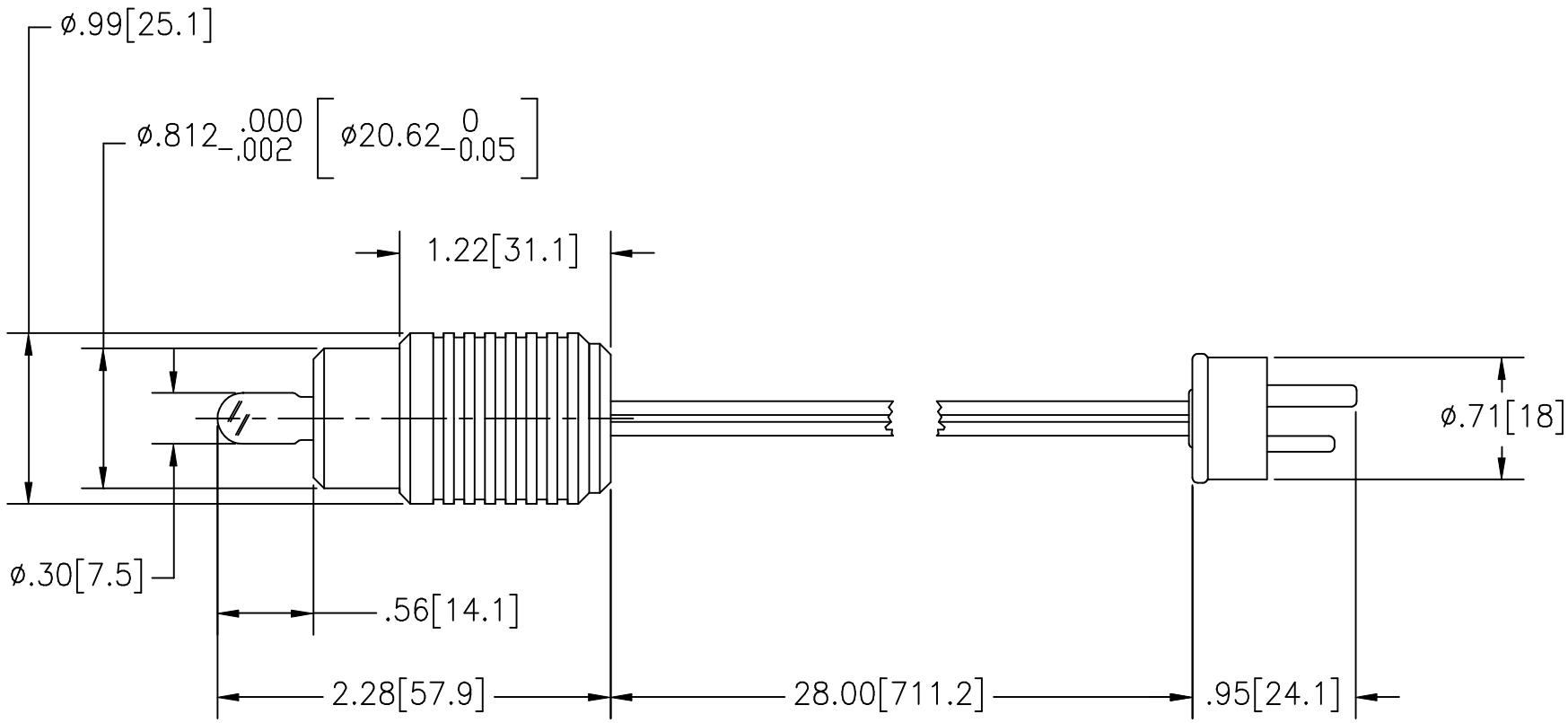

REV A 02JN97

OPTEM