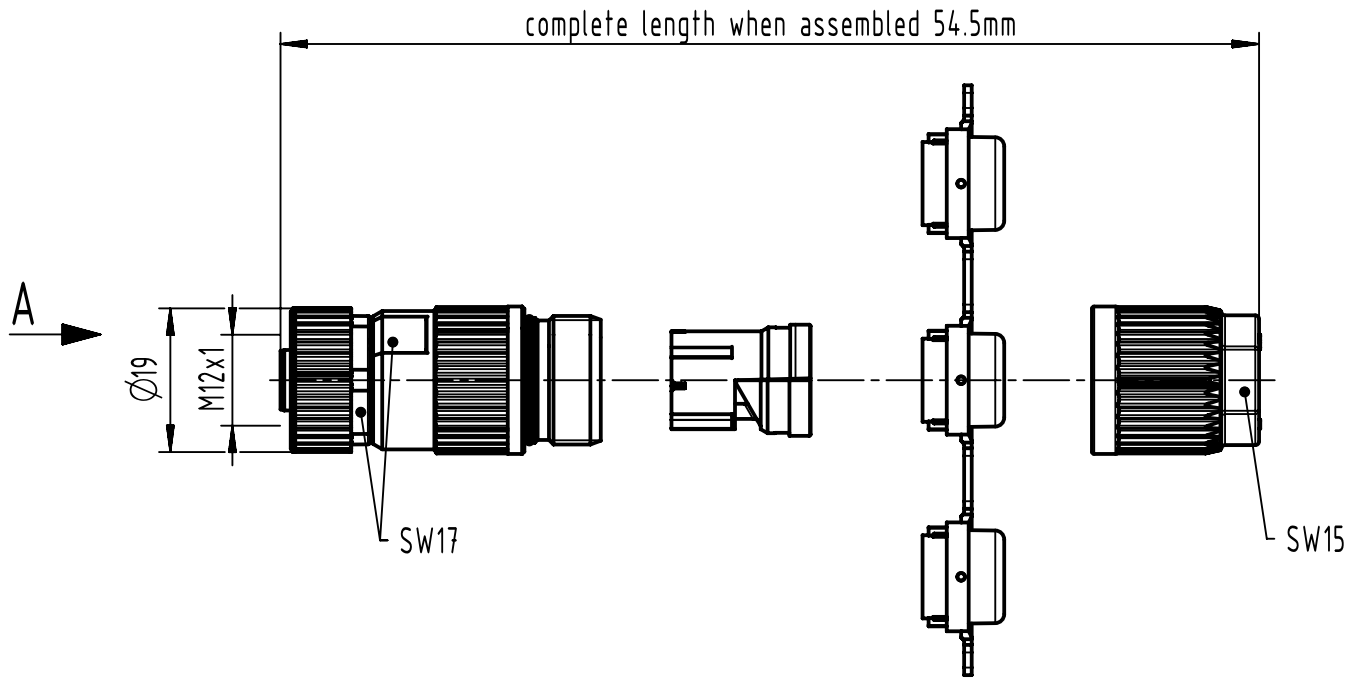

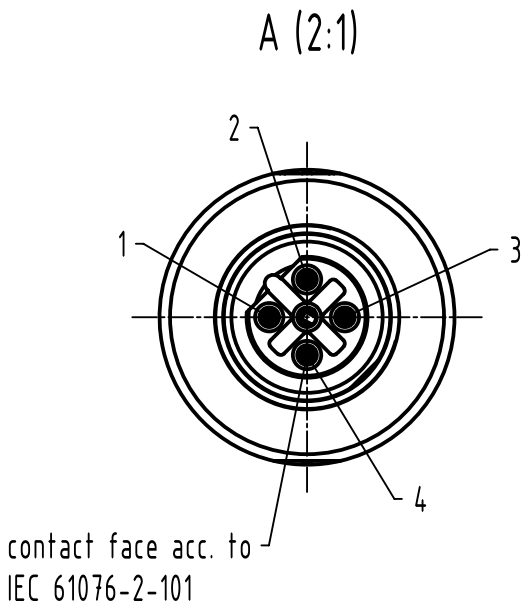

conductor cross section	cable outside diameter
0.14 - 0.34mm² AWG26-AWG22	4.5 - 8.8mm

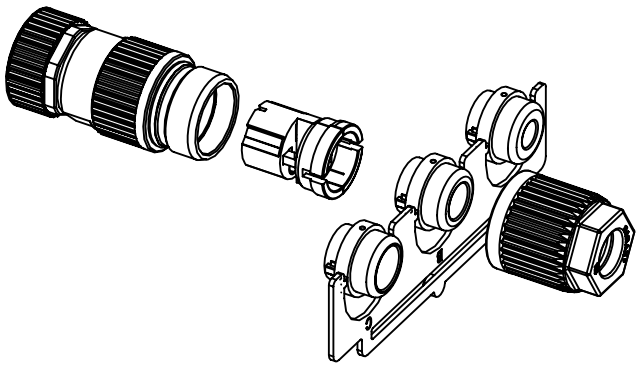

All Dimensions in mm Original Size DIN A4	Scale 1:1	Free size tol.		Ref. Sub.	
All rights reserved Department EL PD	Created by DYCKC	Inspected by EISFELD	Standardisation 302077	Date 2020-10-22	State Final Release
HARTING Electronics GmbH D-32339 Espelkamp	Title HARTING M12-L shielded female B-coded 2-pole				Doc-Key / ECM-Nr. 100195415/UGD/002/J 500000179215
	Type TB	Number 21032412301		Rev. J	Page 1/1

A4