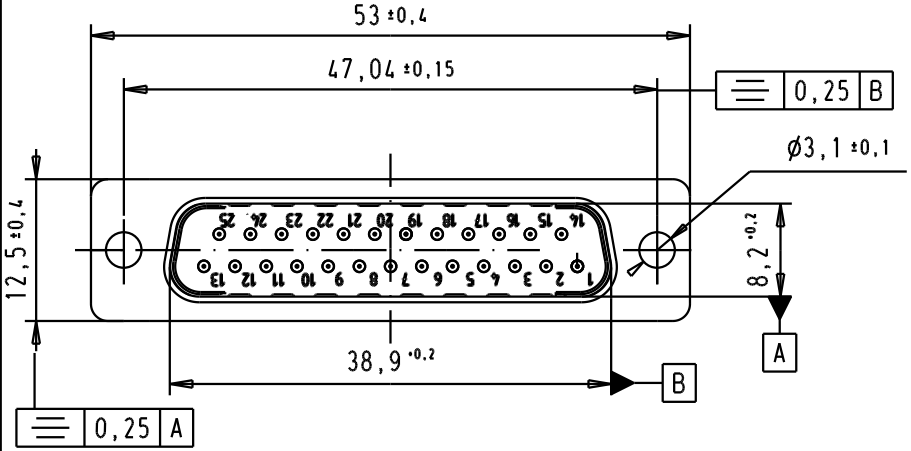

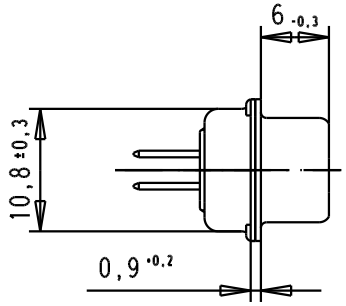

SPECIFICATION

Mating Cycles	500
Filter type	C
Capacitance	470pf ±20%
Working Voltage	100v
Current Rating	7.5A
Insulation Resistance	>1GΩ

FREQUENCY (MHz)	ATTENUATION (dB)
5	-
10	1dB
50	10dB
100	15dB
500	35dB
1000	32dB

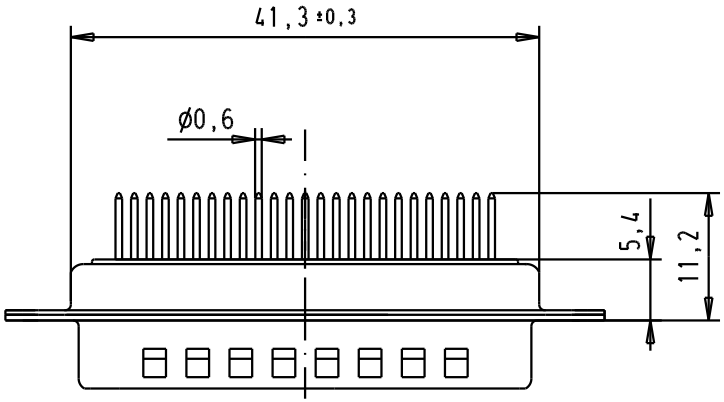

PCB Layout, Component side

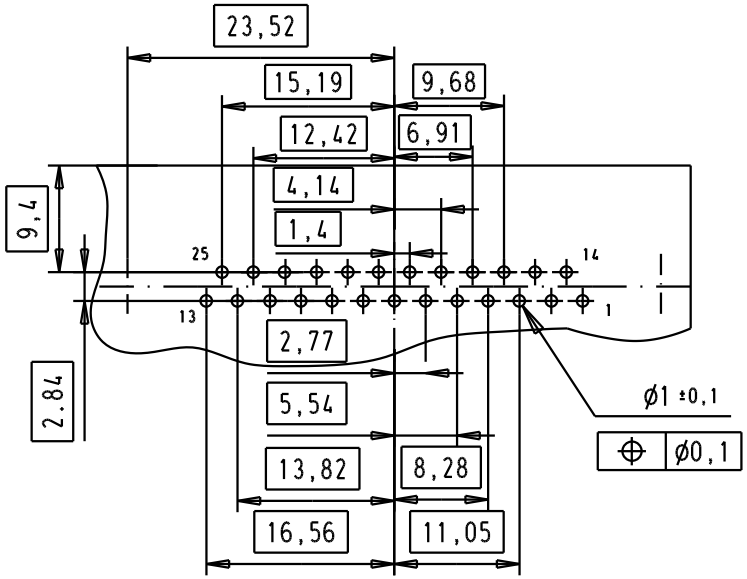

				Dat.	Name			Ma?Mstab/ Scale
			Detail.	8-JUL-02	CV	All Dim. in mm Orig. Size DIN A 4	D-Sub, male, straight, 25 Poles, turned solder pin, tin plated shell with dimples and holes	1.5:1
			Insp.					
			Stand.					
33423	06/02/06	JMDR	HARTING EURL F-95972 Paris				TB 09643227220	Blatt/ Page 1/1
31058	8-JUL-02	CV					Sub.	
Mod.	Dat.	Name						