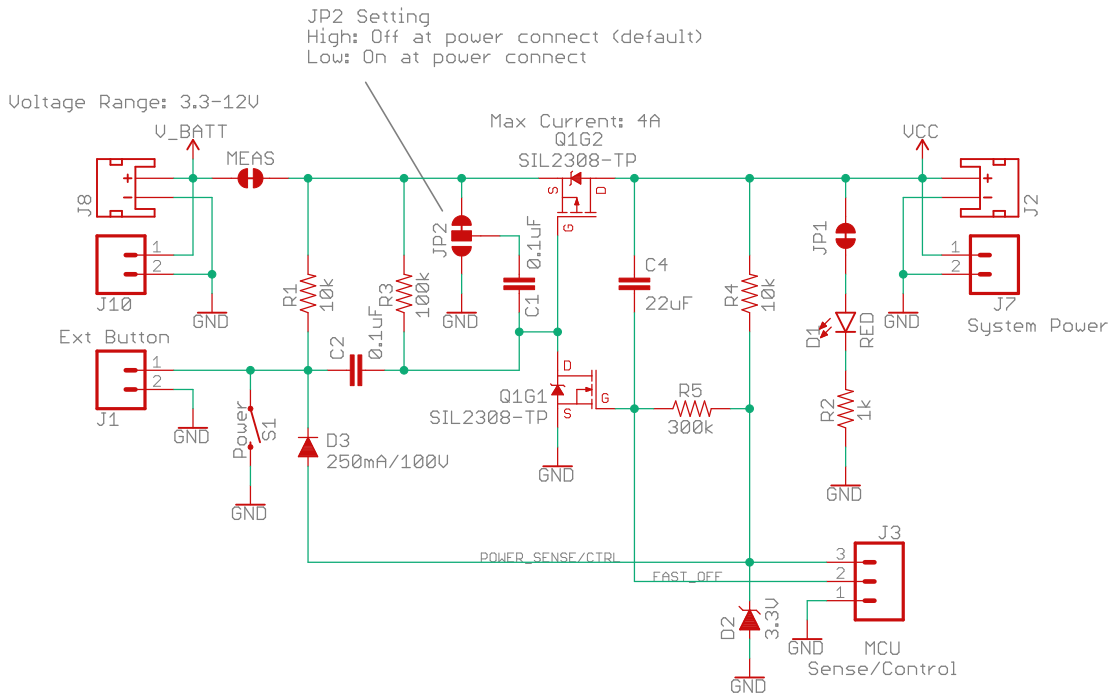

Based on: http://www.mosaic-industries.com/embedded-systems/microcontroller-projects/raspberry-pi/on-off-power-controller

"Power Sense/Control" can be used to detect button press
and/or turn off system after aproximately 6.6s.

Driving "Fast Off" low from a micro will
immediately turn off the system.

open hardware

SPARK X

Released under the Creative Commons
Attribution Share-Alike 4.0 License
https://creativecommons.org/licenses/by-sa/4.0/

TITLE: SparkFun Soft Power Switch

Design by:

REV: v10

Date: 2/16/2021 9:48 AM

Sheet: 1/1