REV	DATE	DESCRIPTION
A	2019/12/10	NEW RELEASE

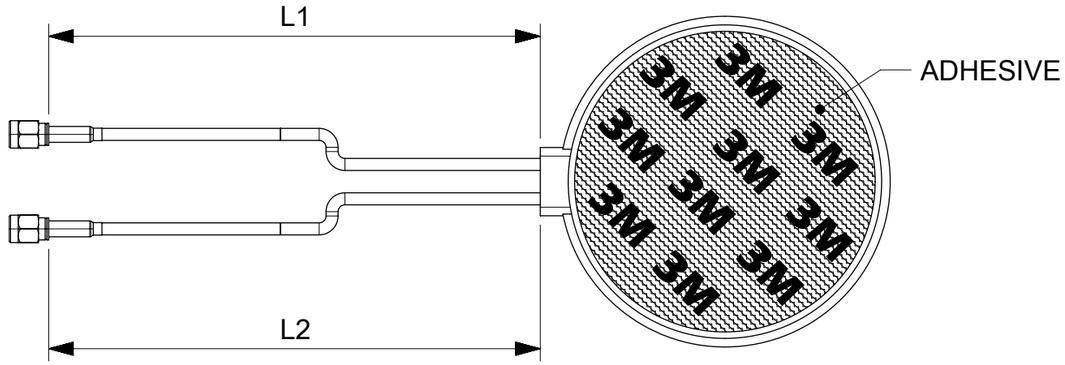

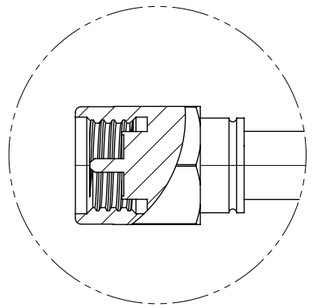

DETAIL A SCALE 3:1

SMA STRAIGHT CABLE PLUGS (MALE)

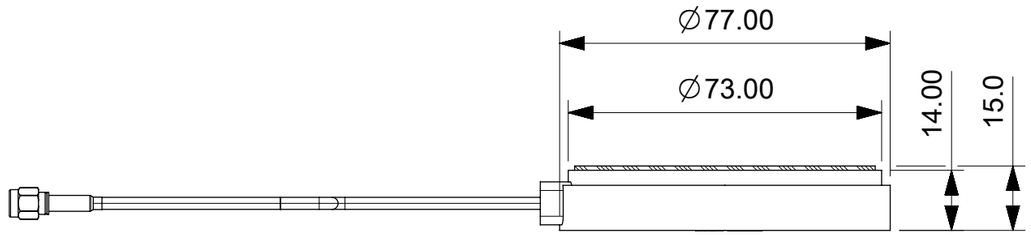

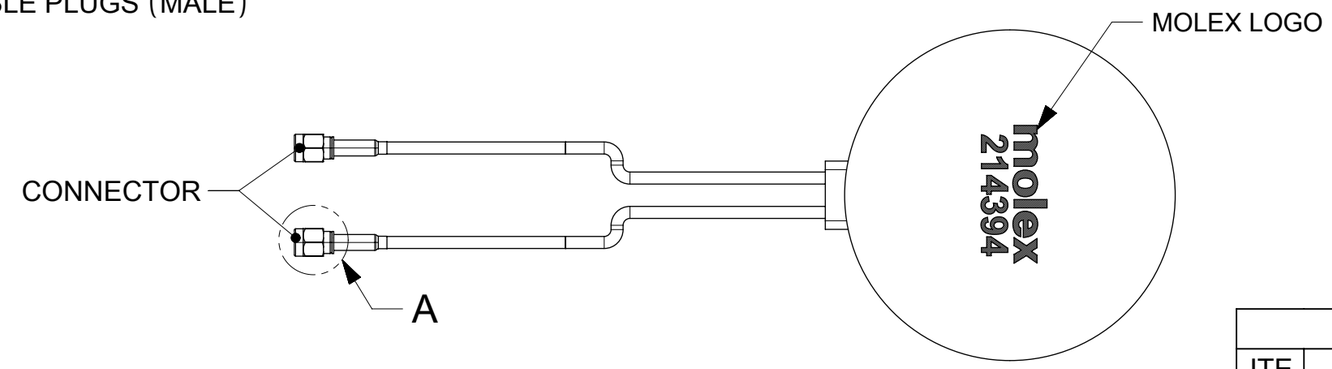

3D VIEW

TABLE A		
ITE	MATERIAL	DESCRIPTION
1	PLASTIC CASE	ABS
2	PCB	FR4
3	CABLE	LMR100
4	CONNECTOR	SMA STRAIGHT CABLE PLUGS (MALE)
5	ADHSIVE	3M CIP-66

NOTES:

1. CABLE LENGTH:L1=1000±50mm;L2=1000±50mm;
2. MATERIAL PLEAES REFER TO TABLE A.

THIS DRAWING CONTAINS INFORMATION THAT IS PROPRIETARY TO MOLEX ELECTRONIC TECHNOLOGIES, LLC AND SHOULD NOT BE USED WITHOUT WRITTEN PERMISSION

SYMBOLS: = 0

DIMENSION UNITS: mm | SCALE: 1:1

GENERAL TOLERANCES (UNLESS SPECIFIED)

ANGULAR TOL	±	°
4 PLACES	±	
3 PLACES	±	
2 PLACES	±	0.75
1 PLACE	±	1.0
0 PLACES	±	

DRAFT WHERE APPLICABLE MUST REMAIN WITHIN DIMENSIONS

CURRENT REV DESC:

EC NO: 629691
DRWN: KCHENG06 2019/12/20
CHK'D: XJSONG 2020/01/03
APPR: XJSONG 2020/01/03

INITIAL REVISION:
DRWN: KCHENG06 2019/12/20
APPR: XJSONG 2020/01/03

molex

MOLEX DUAL BAND WIFI MIMO ANTENNA

PRODUCT CUSTOMER DRAWING

DOCUMENT NUMBER	DOC TYPE	DOC PART	REVISION
2143941000	PSD	000	A

THIRD ANGLE PROJECTION	DRAWING	SERIES	MATERIAL NUMBER	CUSTOMER	SHEET NUMBER
	A3-SIZE	214394	2143941000	GENERAL MARKET	1 OF 1

DOCUMENT STATUS	P1	RELEASE DATE	2020/01/03 01:46:25

FORMAT: tb-prod-A3
REVISION: H
DATE: 2018/01/18