MODEL:

# DWM1327SP

## Swivel/Tilt Wall Mount with Screen Adjustment for 13" to 27" Displays

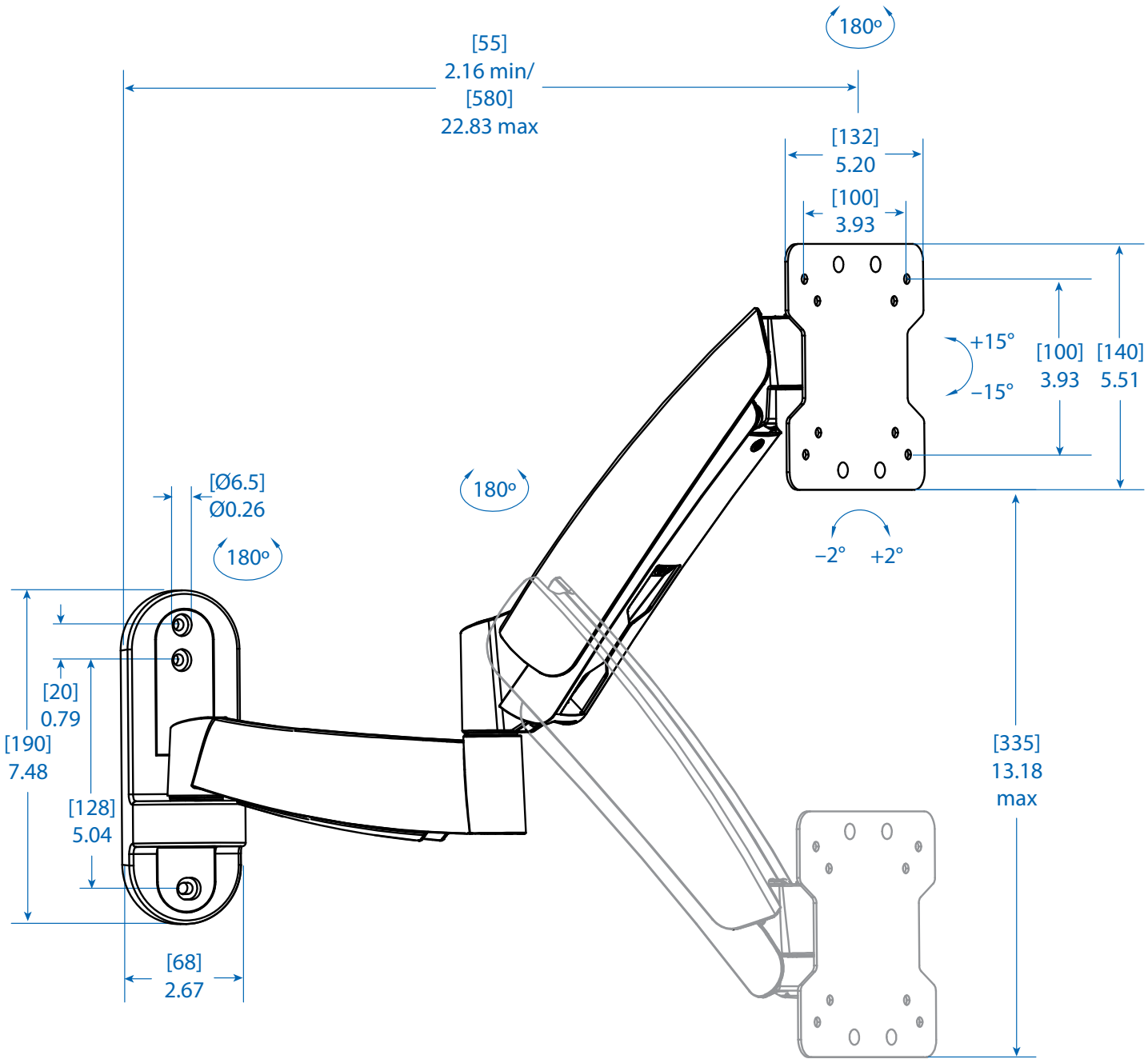



1111 W. 35th Street
Chicago, IL 60609 USA
773.869.1234
www.tripplite.com


Dimensions: [mm] INCHES

Tripp Lite has a policy of continuous improvement. Specifications are subject to change without notice.

Copyright © 2017 Tripp Lite.

17-02-240