THIS DRAWING IS UNPUBLISHED. RELEASED FOR PUBLICATION -,- .
© COPYRIGHT - By - ALL RIGHTS RESERVED.

REVISIONS					
P	LTR	DESCRIPTION	DATE	DWN	APVD
	D1	REVISED PER ECO-21-003828	23MAR2021	AK	SZ

OBSOLETE

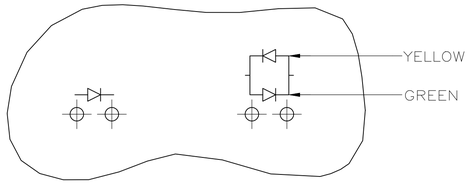

LED CURRENT DIAGRAM
5406967-8 ONLY

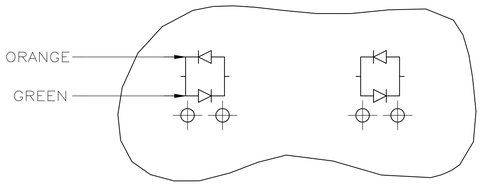

LED CURRENT DIAGRAM
7 ~~5406967-7~~ ONLY

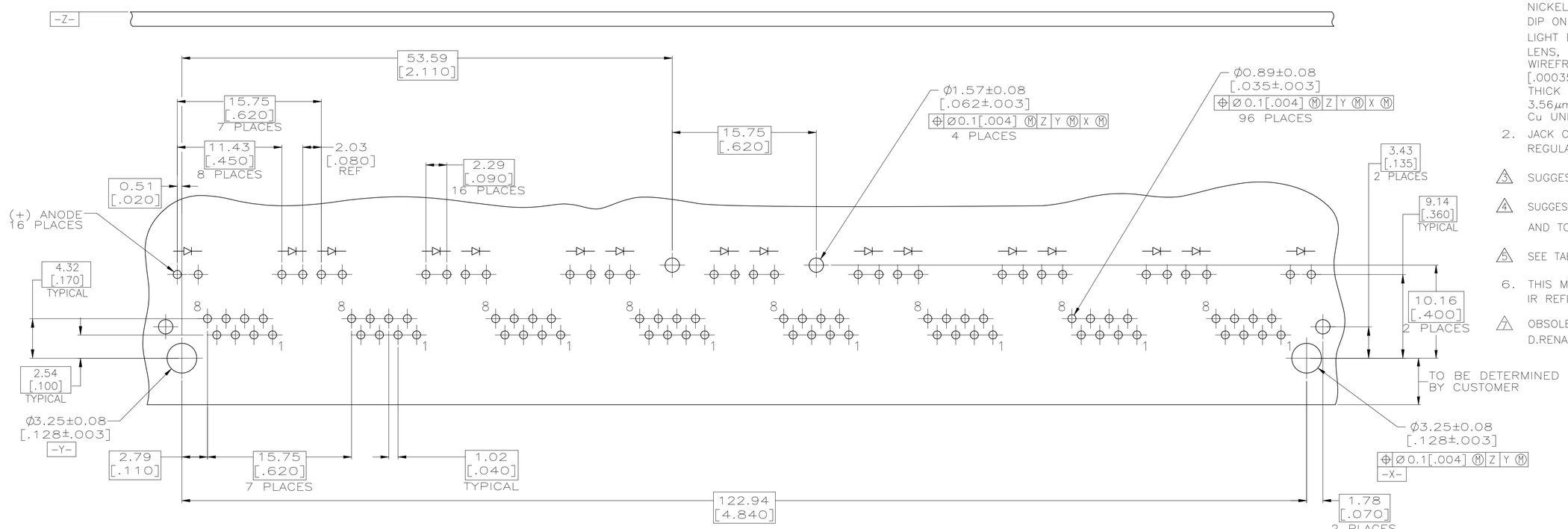

SUGGESTED PRINTED CIRCUIT BOARD LAYOUT
COMPONENT SIDE

1. MATERIAL:
HOUSING – HIGH TEMPERATURE THERMOPLASTIC, BLACK, UL94V-0.
TERMINALS – 0.36[.014] THICK PHOS BRONZE PLATED WITH 1.27μm[.000050] MIN THICK HARD GOLD IN LOCALIZED AREA AND 3.81μm [.000150] MIN THICK MATTE TIN IN SOLDER AREA OVER 1.27μm[.000050] MIN THICK NICKEL UNDERPLATE.
SHIELD – 0.196[.0077] THICK COPPER ALLOY PREPLATED WITH 1.27μm[.000050] MINIMUM SATIN NICKEL WITH 2.03μm[.000080] MINIMUM HOT TIN DIP ON PCB GROUND TABS.
LIGHT EMITTING DIODE (LED) – DIFFUSED EPOXY LENS, 0.51 x 0.51[.020 x .020] CARBON STEEL WIREFRAME LEADS PREPLATED WITH 8.89μm [.0003500] THICK Sn/Cu OVER 2.03μm[.000080] THICK Ag OVER 1.02μm[.000040] THICK Cu 3.56μm[.000140] THICK Ni OVER 1.02μm[.000040] Cu UNDERPLATE.
2. JACK CAVITY CONFORMS TO FCC RULES AND REGULATIIONS PART 68, SUBPART F.
3. SUGGESTED PANEL OPENING DIMENSIONS.
4. SUGGESTED CLEARANCE BETWEEN TOP OF CONNECTOR AND TOP PANEL OPENING.
5. SEE TABLE FOR COLOR OF LEDS.
6. THIS MODULAR JACK WITH INTEGRATED LED IS NOT IR REFLOW SOLDERING PROCESS COMPATIBLE.
7. OBSOLETE PARTS: OBSOLETE CIS STREAMLINING PER D.RENAUD/D.SINISI

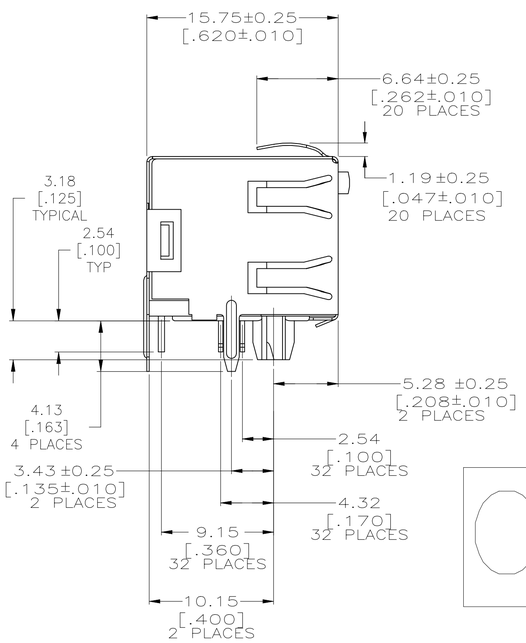

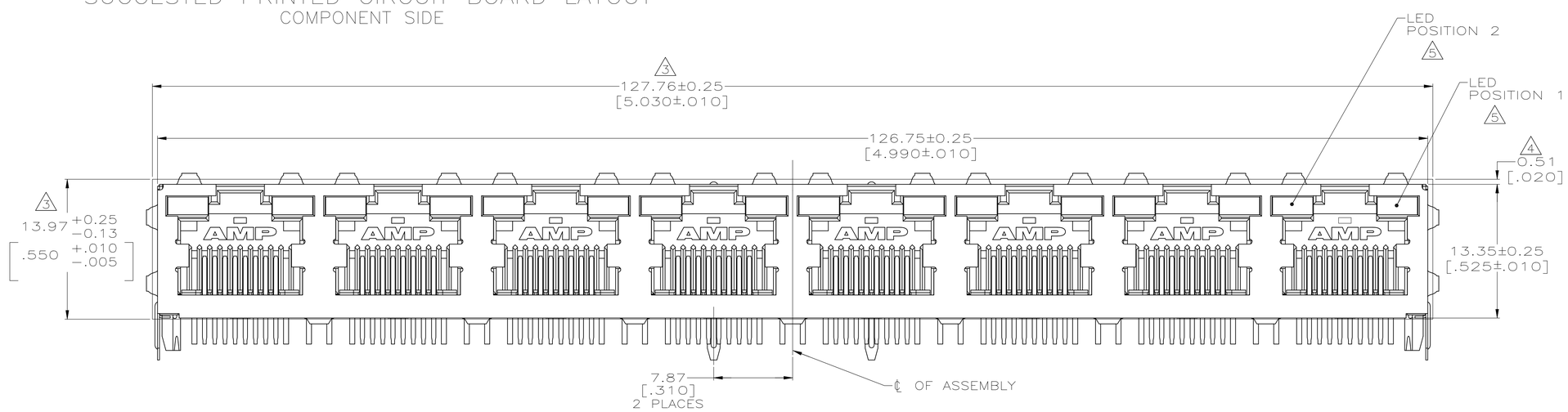

OBSOLETE

OBSOLETE	GREEN	GREEN/YELLOW	5406967-8
OBSOLETE 7	ORANGE/GREEN	ORANGE/GREEN	~~5406967-7~~
	YELLOW	YELLOW	~~5406967-6~~
OBSOLETE	GREEN	GREEN	5406967-5
OBSOLETE	GREEN	YELLOW	5406967-4
OBSOLETE 7	YELLOW	–	~~5406967-3~~
	–	GREEN	~~5406967-2~~
	YELLOW	GREEN	~~5406967-1~~
	POSITION 2	POSITION 1	PART NUMBER
	INDICATOR COLOR FOR EACH HOUSING		

THIS DRAWING IS A CONTROLLED DOCUMENT.

DIMENSIONS: mm [INCHES]

TOLERANCES UNLESS OTHERWISE SPECIFIED:
0 PLC ± –
1 PLC ± –
2 PLC ± 0.25[.01]
3 PLC ± 0.13[.005]
4 PLC ± –
ANGLES ± –

MATERIAL: SEE NOTE 1
FINISH: SEE NOTE 1

DWN	B. LATTUCA	22SEPT05
CHK	J. WESTMAN	22SEPT05
APVD	S. FLICKINGER	22SEPT05
PRODUCT SPEC	108-1163-4	
APPLICATION SPEC	114-2154	
WEIGHT	–	

TE Connectivity

NAME: INVERTED MODULAR JACK ASSEMBLY, 1X8, SHIELDED, BOTTOM TAB, PANEL GROUND, LED

SIZE	CAGE CODE	DRAWING NO	RESTRICTED TO
A1	00779	C-5406967	–

CUSTOMER DRAWING | SCALE 4:1 | SHEET 1 OF 1 | REV D1

4805 (1/15)