PART NO.	P2RFD-1660-TPS			
REV	DESCRIPTION	DWN	DATE	APPROVED
–	ENGINEERING RELEASE	CZS	05/09/16	JDMc

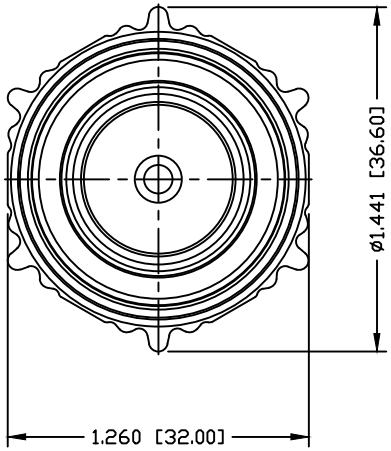

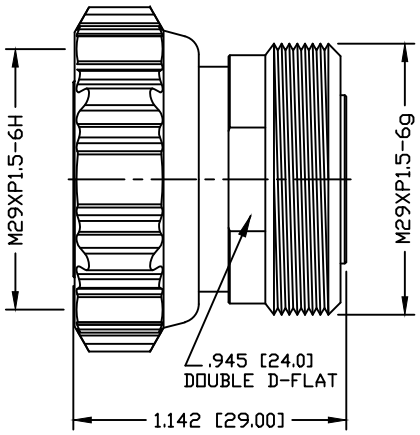

SPECIFICATIONS:

IMPEDANCE: 50 OHMS
FREQUENCY RANGE: DC–7.5 GHz
PEAK POWER: 13.2 Kw max.
AVERAGE POWER: 3.0 Kw max.
VSWR MAX: <1.1:1 @ DC–7.5 GHz
INSERTION LOSS: –.01 dB x √ FREQUENCY GHz
3rd ORDER IM: <–160 dBc @ 1900 MHz
TEMPERATURE RANGE: –55°C TO 165°C

#	DESCRIPTION	QTY	MATERIAL	FINISH
5	SHELL	1	BRASS	WHITE BRONZE
4	GASKET	1	SI RUBBER	---
3	PIN	1	BRASS	SILVER
2	INSULATOR	1	PTFE	---
1	BODY	1	BRASS	SILVER

CUSTOMER OUTLINE DRAWING

ALL DIMENSIONS ARE REFERENCE ONLY

UNLESS OTHERWISE SPECIFIED: DIMENSIONS ARE IN INCHES AND [MILLIMETERS]

DRAWN	C. ZUNIGA	05/09/16
CHECKED		
ORJ DRAWN	C. ZUNIGA	05/09/16

RoHS COMPLIANT

PROPRIETARY AND CONFIDENTIAL

THIS DRAWING CONTAINS INFORMATION PROPRIETARY TO RF INDUSTRIES, ANY UNAUTHORIZED USE OF THIS DRAWING IS EXPRESSLY PROHIBITED WITHOUT WRITTEN PERMISSION FROM RF INDUSTRIES. ANY VIOLATION IS PUNISHABLE UNDER U.S. COPYRIGHT LAWS.

RF connectors
DIVISION OF RF INDUSTRIES, LTD.
7610 MIRAMAR RD.
SAN DIEGO, CA 92126
(858) 549-6340
(858) 549-6345 FAX

7/16 DIN MALE TO FEMALE

TEST PORT ADAPTER

SIZE	CABLE GROUP	DWG NO.	REV
A	N/A	P2RFD-1660-TPS	—

SCALE:	ENGINEERING ID:	SHEET 1 OF 1
NTS	001560	