SHEET OF

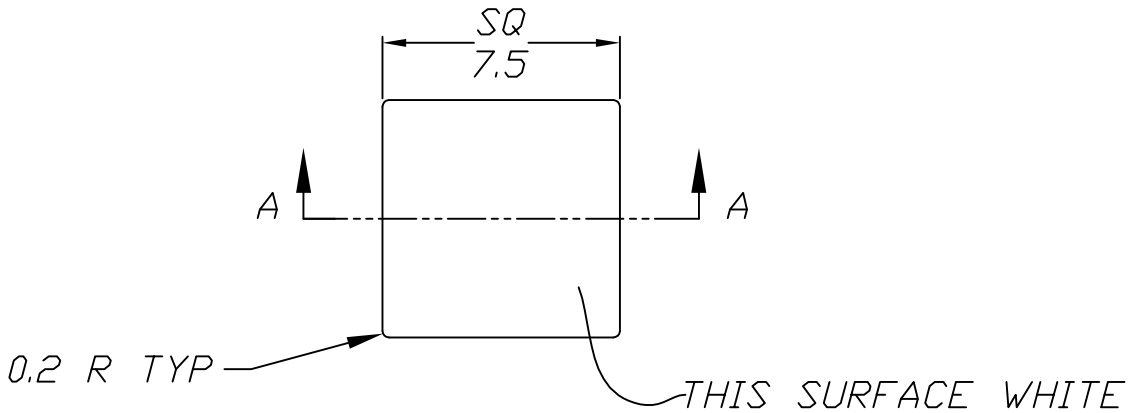

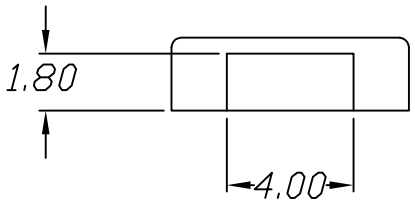

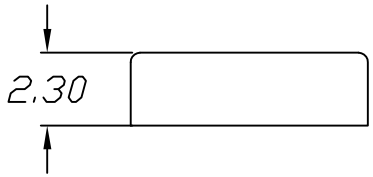

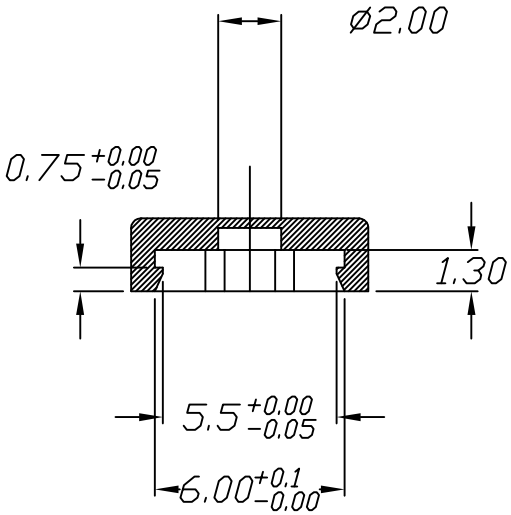

CROSS SECTION A-A

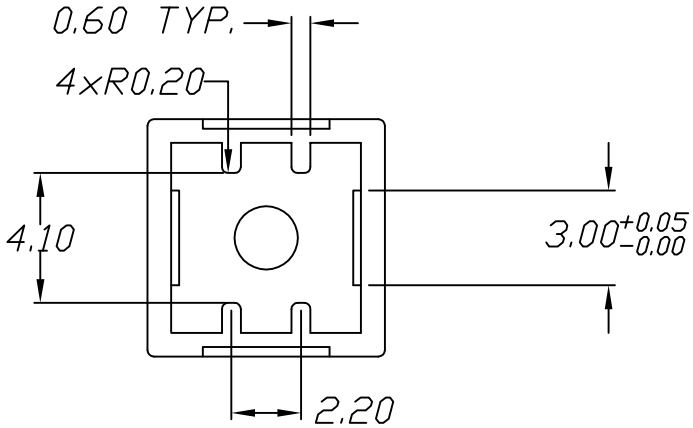

NOTES:

1. ALL DIMENSIONS IN MM
2. GENERAL TOLERANCE: X.X=±0.2
   X.XX=±0.1
3. MATERIAL: PC

REV.	ECN No.	DESCRIPTION	DATE	CHKD
B	12589	REVISED AND REDRAWN	12/27/02	CJB

THE INFORMATION CONTAINED IN THIS DOCUMENT IS PROPRIETARY TO E-SWITCH AND IS NOT TO BE COPIED OR TRANSFERRED

E-SWITCH®

TITLE				
1J WHT CAP (TL1240 SERIES)				
SCALE 4:1	DATE 2/9/95	DR JL	DWG P001004	REV B