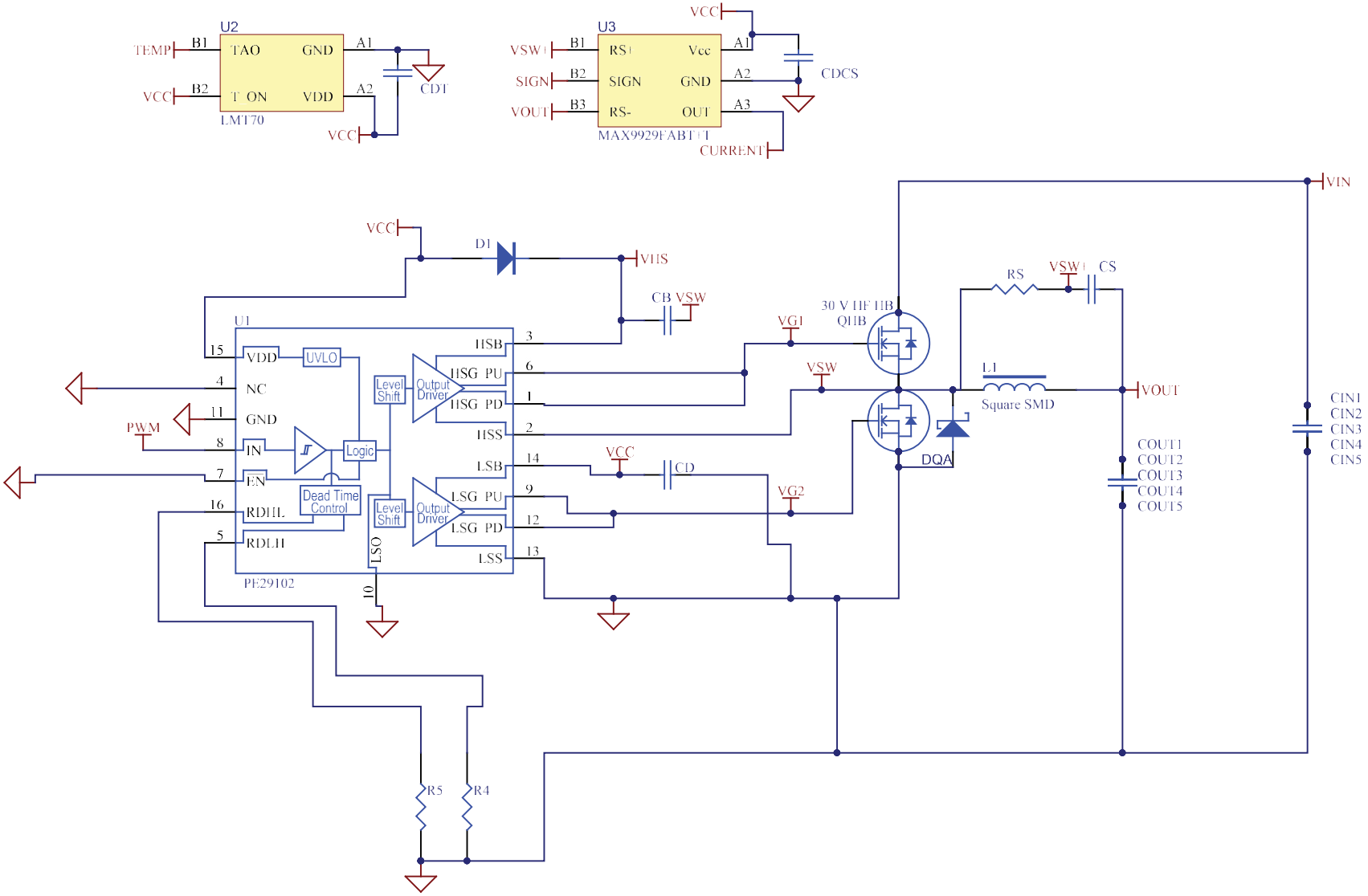


Figure 11: EPC9204 schematic