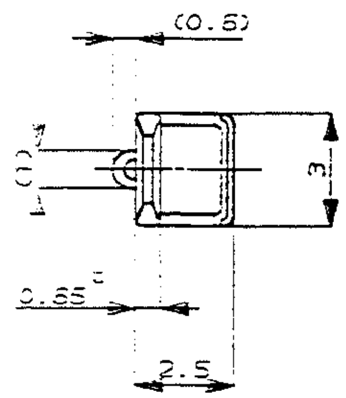

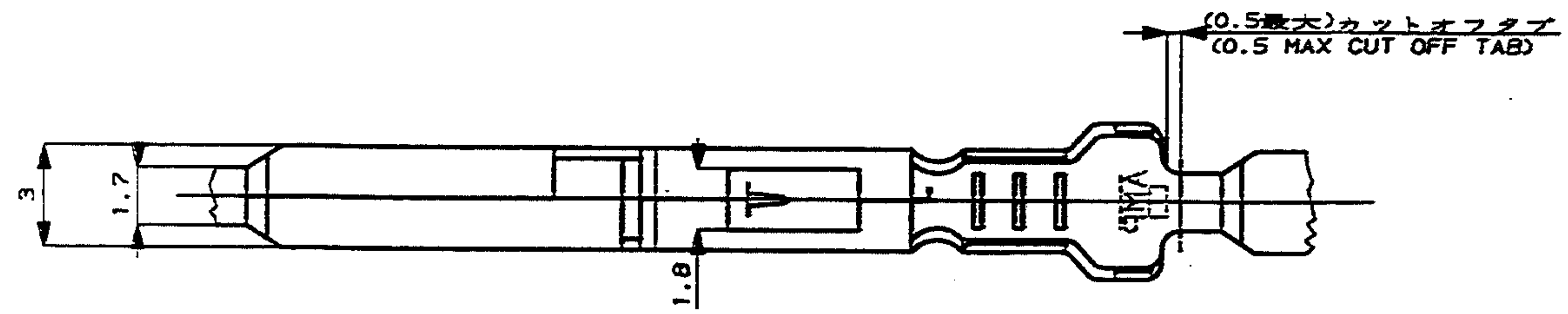

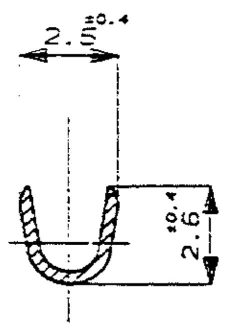

断面 A-A
(SECT. A-A)

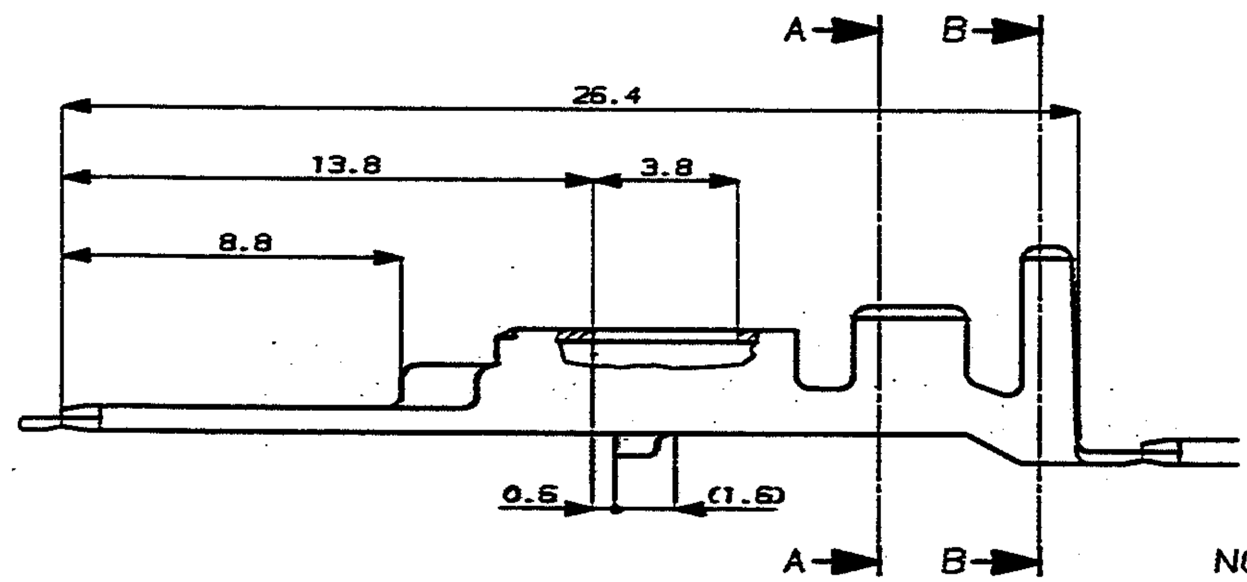

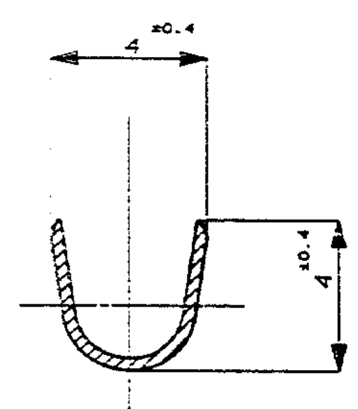

断面 B-B
(SECT. B-B)

注：
1. 嵌合相手リセプタクル型番 172775,172776
2. 製品規格 No.108-5166
3. 取付適用規格 114-5072
4. 相手ハウジング型番 172518 他
5. 逆巻きリール

NOTES;
1. MATE TAB P/N 172775,172776
2. PRODUCT SPEC. No. 108-5166
3. APPLICATION SPEC. No. 114-5072
4. PLUG HSG P/N 172518 ETC.
5. REVERSE REEL
6. OBSOLETE

バラ状端子型番 (LP NO.)	仕上 (FINISH)	材料 (MATERIAL)	型番 (P/N)	項番 (ID)
172780-1	錫メッキ済 (PRE-TIN)	黄銅 (BRASS)	6 5 1-172779-1	4
172780-4	錫メッキ済 (PRE-TIN)	燐青銅 (PHOS BRO)	6 172779-4	3
172780-2	金メッキ (SELECTIVE GOLD)	黄銅 (BRASS)	172779-2	2
172780-1	錫メッキ済 (PRE-TIN)	黄銅 (BRASS)	172779-1	1

LTR	REVISION RECORD	DR	CHK	DATE
C1	ECR-23-172187	RK	ST	17APR 2023
	J-10629			
C	REDRAWN W/CHANGE			

© 19 BY AMP (Japan) LTD.
ALL RIGHTS RESERVED.
AMP PRODUCTS COVERED BY PATENTS
AND OR PATENTS PENDING

TE Connectivity

WIRE RANGE: 0.3~0.89 mm² (AWG#22~#18)
INSULATION DIA: 1.5~2.6 mm
MATERIAL: 表参照 SEE TABLE
FINISH: 表参照 SEE TABLE
DR. K.Betow 4/19 '89
DE. K.Betow 4/19 '89
CHK. 4/19 '89
APP. M. Matsushita

NAME: タブコンタクト マルチインターコネクタ(MIC)マークII
TAB MIC MK II

GENERAL TOLERANCE
0<=≤ 10 : ±0.2
10<=≤ 30 : ±0.25
30<=≤100 : ±0.3
ANGLES : ±3°

SIZE	LOC	NUMBER
C	J	C-172779

SCALE	REV.	SHEET
5-1	C1	1 OF 1

DEPT:AUTO>E20S01>U.MIC>U.CONTACT>S.TAB2-C

CUSTOMER DRAWING