REV	REVISIONS	DRN	CKD	DATE
A	NEW RELEASE	LD	NO	3-31-20
B	ADDED SECTION VIEW AND REVISE PIN & HOLE TOLERANCE	LD	NO	2-24-21

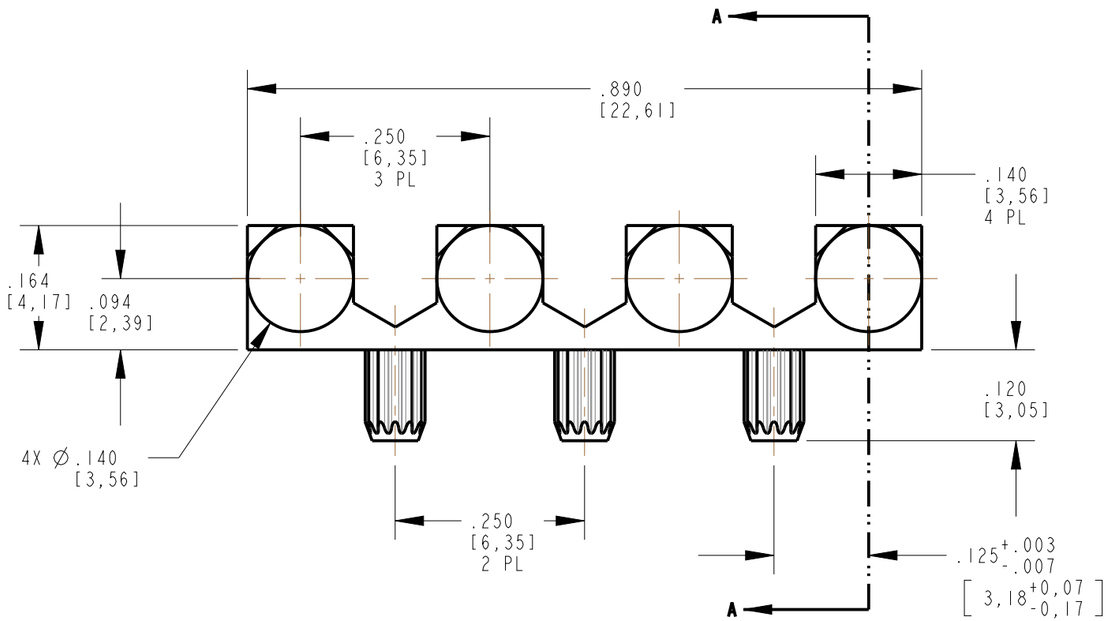

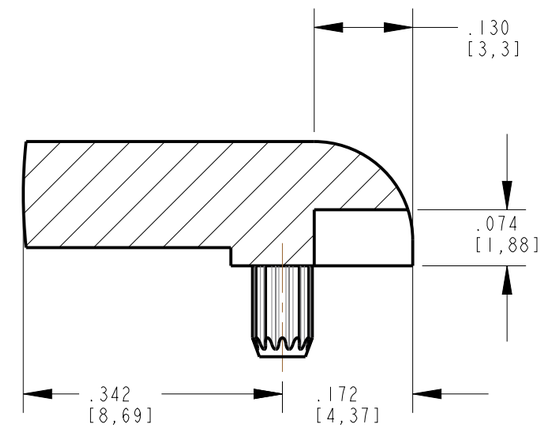

SECTION A-A

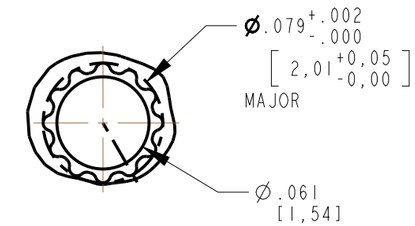

DETAIL B
SCALE 10.000

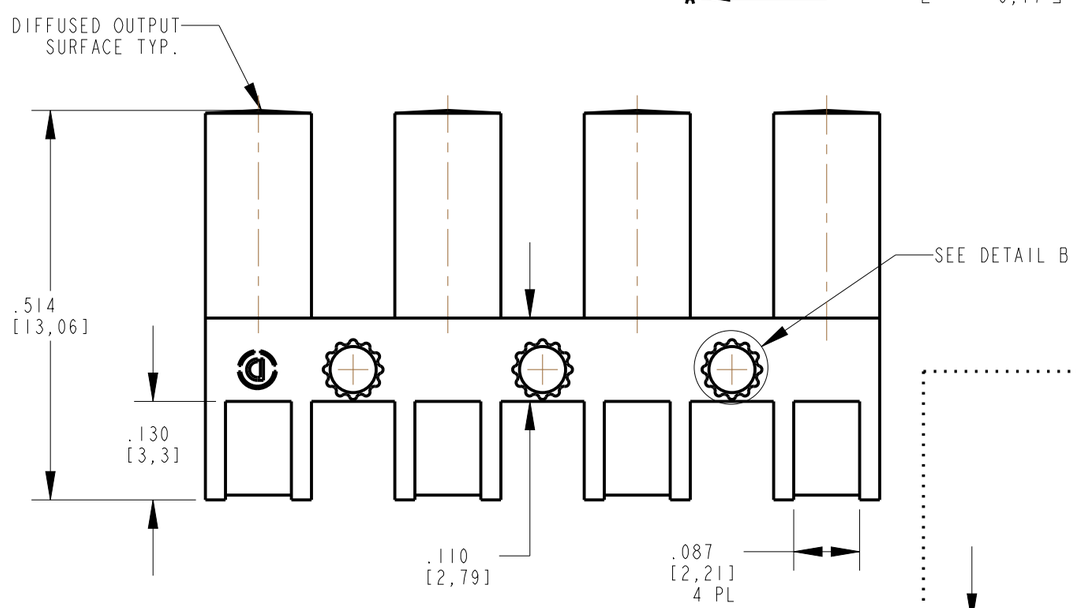

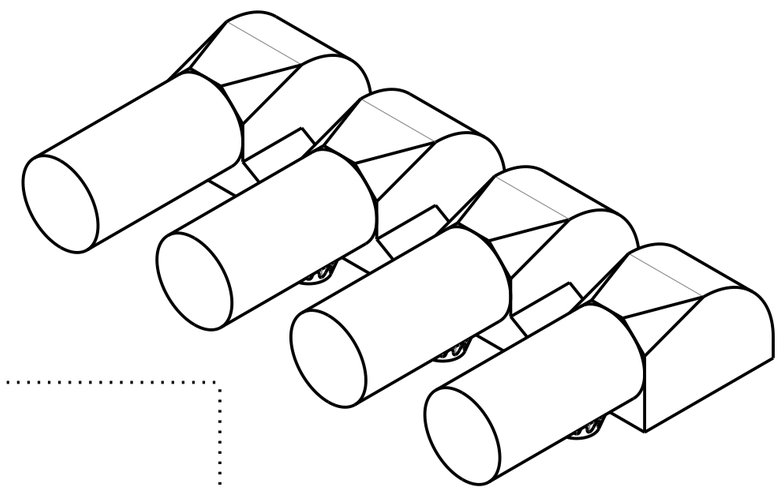

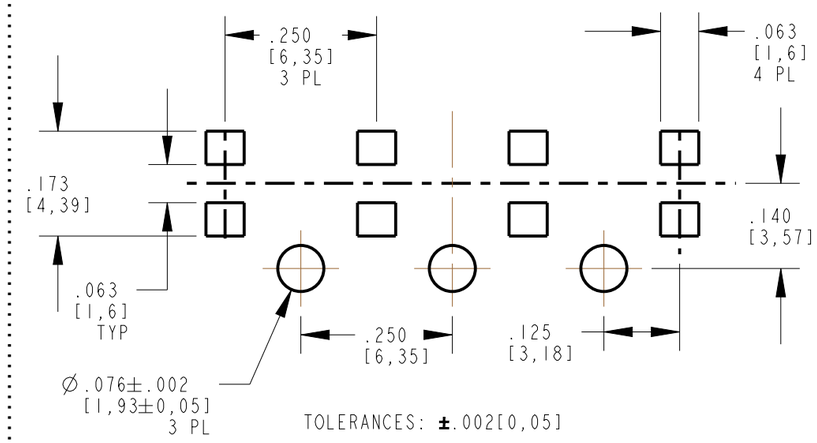

TOLERANCES: ±.002[0,05]

RECOMMENDED HOLE PATTERN GAUGE

NOTES:

1. MATERIAL TO BE CLEAR, TRANSMISSIVE POLYCARBONATE (UL-94V-0 FAMMABILITY)
2. COMPONENTS DESIGNED TO BE PRESSED INTO PC BOARD.
3. STORAGE AND OPERATING TEMPERATURE: -30°C TO 100°C
4. DIALIGHT PART NUMBER: 515-1020F
5. RECOMMENDED SURFACE MOUNT LED DIALIGTH PART NUMBERS:
   597-3111-4XXF (AlGaAS RED)
   597-3201-4XXF (ORANGE)
   597-3311-4XXF (GREEN)
   597-3401-4XXF (YELLOW)

THIS DRAWING AND THE CONTENTS HEREIN ARE CONFIDENTIAL AND THE SOLE PROPERTY OF DIALIGHT CORP. REPRODUCTION OF THIS DRAWING OR CONSTRUCTION OF ANY PARTS WITHIN THIS DRAWING ARE FORBIDDEN WITHOUT THE WRITTEN CONSENT OF DIALIGHT CORP.

DIALIGHT CORP INTERNAL REFERENCE ONLY = 3D MODEL : 5151020-B.9

SCALE: 5.000

ALL DIM'S: INCH (mm)

TOLERANCES:
UNLESS OTHERWISE SPECIFIED
FRACTIONS: ±1/64
DECIMALS (.XX): ±.01
DECIMALS (.XXX): ±.005
DECIMALS (.XXXX): ±.0005
ANGLES: ±1°

FINISH

FSCM 83330

DRAWING NUMBER: C-18471

REV: B

TITLE: LIGHTPIPE, ARRAY

MATERIAL

Dialight
1501 ROUTE 34 SOUTH
FARMINGDALE, NJ 07727
(732) 919-3119
www.dialight.com

SHEET 1 OF 1

FAMILY TABLE: