Style
M12 Socket, shielded
8 pin
A-coding

Ratings
Voltage: 30 V
Current: 2 A

Operating Temperature Range
-40 ~ 105 °C

Materials
1. Insulator: Polyamide 66 (PA66), UL94 HB, black
2. Pin: C3604 brass, gold plated
3. Shell: C3604 brass, nickel plated
4. O-ring: Nitrile rubber, black & green
5. Pin alignment guide: Polyamide 66 (PA66), UL94 HB, black

Electrical Requirements
Dielectric strength: 1 min @ 500 Vac
Insulation resistance: 100 MΩ @ 500 Vdc
Contact resistance: 10 mΩ or less

Mechanical Requirements
Life cycle: 500 mating cycles minimum

Environmental Requirements
Salt spray test: 35 °C, relative humidity 90-95%, 5% NaCl mist for 48 hrs. Wash parts after test. Maintain mechanical requirements and a contact resistance of less than 10 mΩ.
Waterproof: IP67

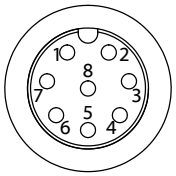

Front View
Not to Scale

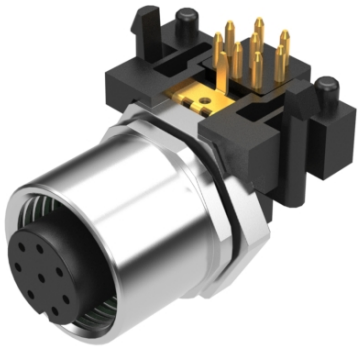

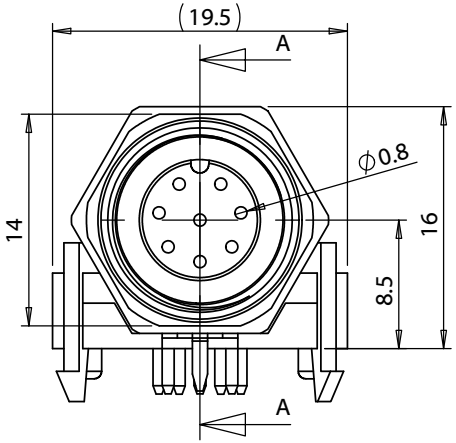

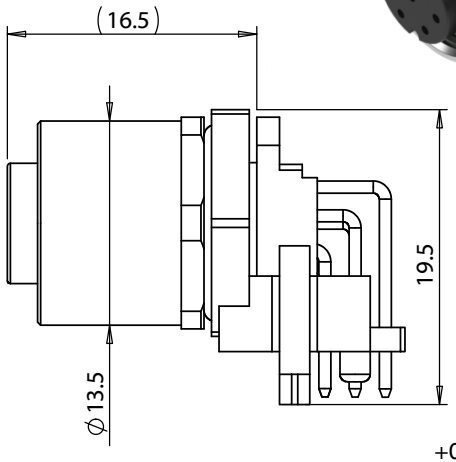

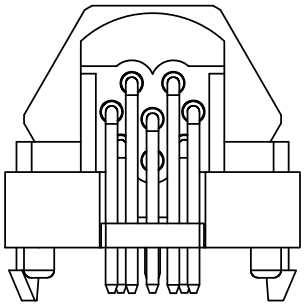

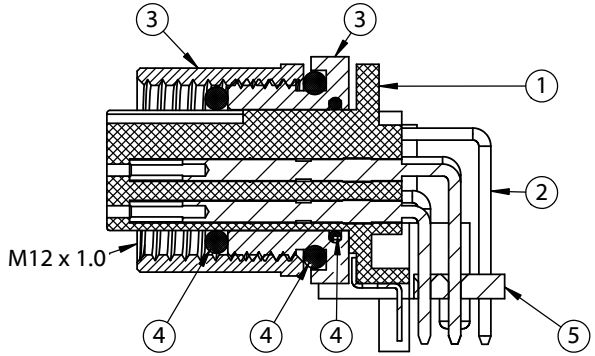

SECTION A-A

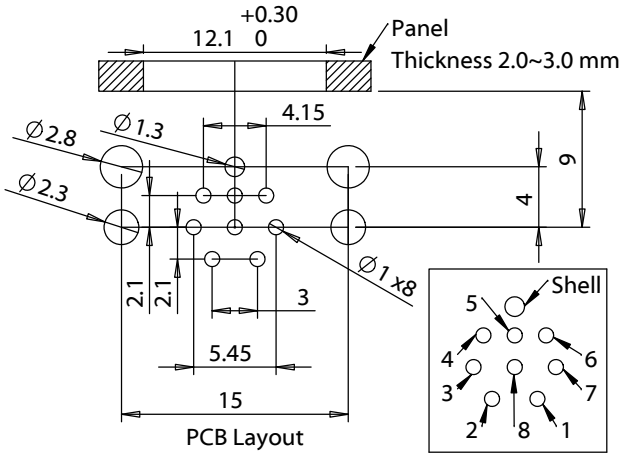

PCB Layout

Revision:	Date:	Description:
A	9/29/2020	Initial release
A1	10/13/2021	Added pin alignment guide

Prepared: AG — Digitally signed by AG Date: 2021.10.15 11:33:55 -07'00'

Verified: JD — Digitally signed by JD Date: 2021.10.15 11:36:18 -07'00'

Dimensions are in millimeters.
Tolerances:
X: ± 0.5 mm
X.X: ± 0.3 mm
X.XX: ± 0.1 mm

Notes:
RoHS compliant
Function test: no open, no short circuit, no intermittent

Description:
Connector, 8 pin M12 A-code socket, 12xL23.4mm, gold plated, PCB mount, 90°, PCB, IP67

TENSILITY
tel 1.541.323.3228 800 877.670.7118
fax 1.541.323.4202 web tensility.com

Size: A
Part number: 54-00248
Scale: 2:1
Sheet 1 of 1

5 4 3 2 1