PLEASE CHECK WWW.MOLEX.COM FOR LATEST PART INFORMATION

Part Number: 1051990001

Status: Active

Overview: Camera Sockets

Description: 8.50 by 9.50mm Camera Socket, 4.28mm Height, Parallel data type, Surface Mount, On-board, Side Contacts

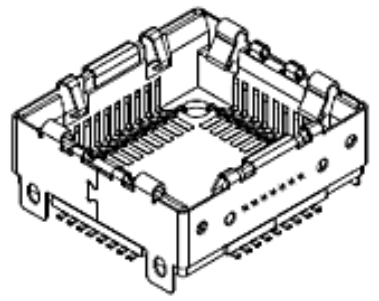

Series image - Reference only

Documents:

Drawing (PDF)
Product Specification PS-105199-001-001 (PDF)
Packaging Specification PK-105199-001 (PDF)
RoHS Certificate of Compliance (PDF)

General	
Product Family	Other Sockets
Series	105199
Component Type	Socket
Overview	Camera Sockets
Product Name	Camera Socket
UPC	884982903081
Physical	
Circuits (Loaded)	36
Circuits (maximum)	36
Color - Resin	White
Durability (mating cycles max)	20
Entry Angle	Vertical (Top Entry)
Keying to Mating Part	None
Material - Metal	Copper Alloy
Material - Plating Mating	Gold
Material - Plating Termination	Gold
Material - Resin	High Temperature Thermoplastic
Net Weight	0.280/g
PCB Retention	None
PCB Thickness - Recommended	1.00mm
Packaging Type	Embossed Tape on Reel
Pitch - Mating Interface	0.40mm
Pitch - Termination Interface	0.40mm
Temperature Range - Operating	-30°C to +85°C
Termination Interface: Style	Surface Mount
Electrical	
Current - Maximum per Contact	0.5A
Voltage - Maximum	50V AC/DC
Solder Process Data	
Duration at Max. Process Temperature (seconds)	003
Lead-freeProcess Capability	REFLOW
Max. Cycles at Max. Process Temperature	001
Process Temperature max. C	255
Material Info	
Reference - Drawing Numbers	
Packaging Specification	PK-105199-001
Product Specification	PS-105199-001-001
Sales Drawing	SD-105199-001

EU ELV
Not Relevant

EU RoHS
Compliant

China RoHS

REACH SVHC
Not Contained Per - ED/30/2017 (7 July 2017)

Halogen-Free Status
Low-Halogen

Need more information on product environmental compliance?

Email productcompliance@molex.com
Please visit the Contact Us section for any non-product compliance questions.

China ROHS	Green Image
ELV	Not Relevant
RoHS Phthalates	Not Contained

Search Parts in this Series
105199 Series

Mates With
Camera Module

PLEASE CHECK WWW.MOLEX.COM FOR LATEST PART INFORMATION