THIS DRAWING IS UNPUBLISHED. RELEASED FOR PUBLICATION -.- .
© COPYRIGHT – TE Connectivity Ltd. ALL RIGHTS RESERVED.

PART NUMBER	REV	FIRST USED	MACHINE REFERENCE	FEED TYPE
~~566420 -1~~	~~E~~	~~356462 -2~~	~~G SPLICE TERM~~	~~AIR FEED~~
~~566420 -2~~	~~F~~	~~2161300 -1~~	~~SK CE & GI THRU SPLICE~~	~~AIR FEED~~
7-566420 -7	E	356462-2	SPARE PARTS KIT	–
7-566420 -8	F	–	CONV. KIT FOR -1 TO -2	–

SUPERCEDED BY 1855802-1
SUPERCEDED BY 1855802-2

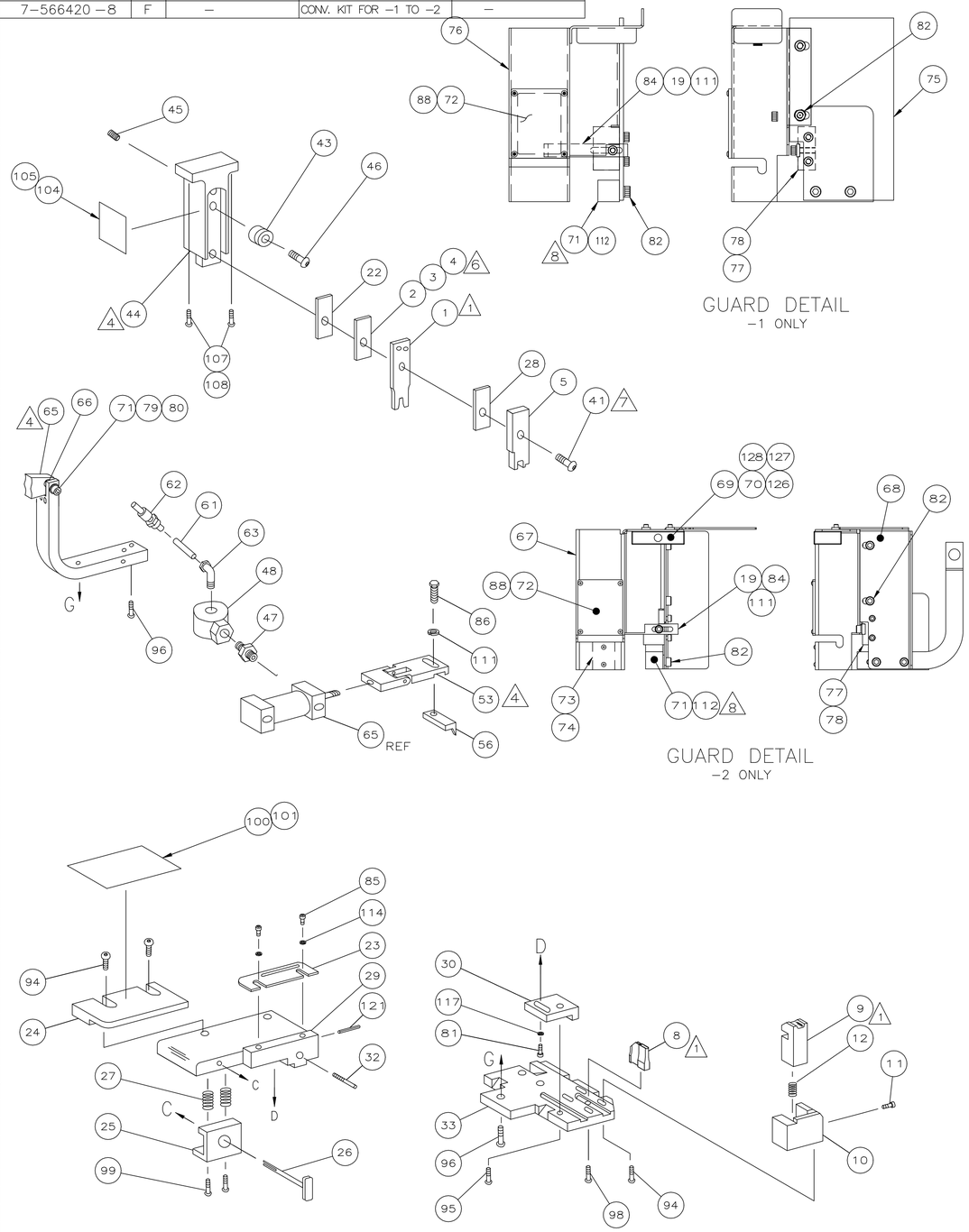

TERMINAL NAME: SPLICE

63130

CRIMPING DATA

PAD NO.	CRIMP HEIGHT	WIRE SIZE	WIRE SET UP
5	.090 ±.002 [2.29 ±0.05mm]		1(17) & 1(16)
5	.086 ±.002 [2.18 ±0.05mm]	3400-4200 CMA	2(17)
4	.082 ±.002 [2.08 ±0.05mm]	2600-3400 CMA	1(19) & 1(18)
4	.078 ±.002 [1.98 ±0.05mm]	1900-2600 CMA	(2) 20
–	–	–	–
–	–	–	–
–	–	–	–
–	–	–	–

CRIMP	SIZE	TYPE	RANGE
WIRE	.110 [2.79mm]	F	1900-5000 CMA
INSUL	–	–	–

WIRE STRIP LENGTH	TERM APPL SPEC	FEED	APPL INSTRUCTION	SET UP GAGE	LAYOUT
.195-.235	114-2088	.620	408-8318(-1) 408-127000(-2)	–	L1981

REVISIONS

P	LTR	DESCRIPTION	DATE	DWN	APVD
	F1	ECR-19-015368	03OCT2019	GK	GB

QTY REQD PER ASSY				PART NO	DESCRIPTION	ITEM NO
2	–	2	–	18029-2	M4 HEX NUT	128
2	–	2	–	18025-2	M4 LOCK WASHER	127
2	–	2	–	18027-2	M4 FLAT WASHER	126
1	–	1	–	408-32162	THRU SPLICE IS SHEET-GII	125
–	–	1	1	217238-1	GENERAL INSTRUCTION PACKAGE	124
–	–	–	1	408-8318	THRU SPLICE IS SHEET	123
–	–	1	–	408-127000	THRU SPLICE IS SHEET	122
–	–	1	1	4-21028-0	PIN,SLT SPR(Ø093x.75)ST GDE PL	121
						120
						119
						118
–	–	1	1	21024-5	WASHER, LOCK(#10)ADJ BLOCK	117
						116
						115
–	–	2	2	21024-2	WASHER,LOCK(#4)FRONT STP GUIDE	114
						113
–	–	AR	AR	21899-2	WASHER,FLAT(#10)	112
–	–	2	2	21024-4	WASHER,LOCK(#8)STRIPPER	111
–	–	REF	REF	1490705-1	KIT, WIRE SHELF	110
						109
2	–	2	–	3-18023-3	SCR, SHC (M6x50)	108
–	–	–	2	3-18023-1	SCR, SHC (M6x30)	107
						106
–	–	AR	AR	25527-3	TAPE, POLYURETHANE FOAM	105
–	–	1	1	690701-2	PLATE, IDENTIFICATION	104
						103
–	–	2	2	21017-2	SCR,DRIVE(#2x.19)ID PLATE	102
–	–	AR	AR	25527-3	TAPE, POLYURETHANE FOAM	101
–	–	1	1	819347-1	PLATE, IDENTIFICATION	100
–	–	2	2	3-21002-0	SCR,BHC(10-32x.88)DRAG	99
–	–	1	1	22733-8	SCR,BHC(8-32x.38 LW)ANVIL	98
						97
–	–	2	2	2-22733-8	SCR,BHC(1/4-20x.62)HSG	96
–	–	1	1	2-21002-7	SCR,BHC(10-32x.50)SG ADJ BLK	95
–	–	4	4	2-21002-2	SCR,BHC(8-32x.50)TERM H DWN	94
–	–	4	4	1-21002-0	SCR,BHC(2-56X.25)	88
						87
–	–	1	1	2-22603-1	SCR,HEX HD(8-32x.38)FEED FINGER	86
–	–	2	2	1-21000-3	SCR,SHC(4-40x.25)F ST GUIDE	85
–	–	1	1	2-21000-7	SCR,SHC(8-32x.50)STRIPPER	84
						83
–	–	4	4	3-21000-4	SCR,SHC(10-32 X .38)	82
–	–	1	1	3-22603-1	SCR, HEX (10-32X.38)SG ADJ BL	81
–	–	1	1	3-21001-3	SCR,SHC(3/8-16X.88)	80
–	–	1	1	21024-8	WASHER,LOCK(.375)	79
–	–	1	1	1338118-1	MOUNT, STRIPPER	78
–	–	2	2	1-21000-9	SCR, SHC 6-32x.38	77
–	–	–	1	1338175-1	GUARD	76
–	–	–	1	1338176-1	GUARD, EXTENSION	75
–	–	1	1	1338177-1	DEFLECTOR	74
–	–	2	2	21002-9	SCR,BHC(2-56 x .19)DEFL	73
–	–	1	1	1338174-1	WINDOW, GUARD	72
–	–	1	1	1338116-1	BRACKET, FEED	71
-78	-77	-2	-1	PART NO	DESCRIPTION	ITEM NO

PARTS LIST

QTY REQD PER ASSY				PART NO	DESCRIPTION	ITEM NO
2	–	2	–	1-18023-3	SCR, SHC, M4 X 16	70
1	–	1	–	2168489-1	ACTUATOR, SPARE MC1	69
1	–	1	–	2161461-1	GUARD, EXTENSION	68
1	–	1	–	2161460-1	GUARD	67
–	–	1	1	371178	WASHER, SPACER	66
–	–	1	1	461065-1	AIR FEED ASSY (1 INCH)	65
						64
–	–	1	1	980285-2	ELBOW, SWIVEL 1/8 NPT - 1/4 T	63
–	–	1	1	23238-1	QUICK DISCONNECT	62
–	–	21.00	21.00	27319-4	TUBING, POLY-FLO Ø25	61
						60
						59
						58
						57
–	–	1	1	1-694433-6	PAWL, FEED	56
						55
						54
–	–	1	1	1-461062-1	FEED FINGER ASSY	53
						52
						51
						50
						49
–	–	1	1	22374-7	VALVE, QUICK EXHAUST	48
–	–	1	1	22304-1	NIPPLE, HEX 1/8 NPT	47
–	–	1	1	21004-9	SCR,SHLD(.31 X .50)WHEEL ADJ	46
–	–	1	1	27058-2	BALL PLUNGER	45
–	–	1	1	1338117-1	TOOL HOLDER	44
–	–	1	1	1338124-1	WHEEL, ADJ	43
						42
–	–	1	1	7-21002-7	BOLT, CRIMPER(5/16x.75)	41
						40
						39
						38
						37
–	–	2	2	18027-4	WASHER, FLAT M6	36
–	–	2	2	2-18023-9	SCR, SHC M6x20	35
						34
–	–	1	1	1338397-1	PLATE, BASE	33
–	–	1	1	690432-3	SCREW, ADJUSTMENT	32
						31
–	–	1	1	455689-1	BLOCK, STRIP GUIDE ADJ	30
–	–	1	1	455671-1	PLATE, STRIP GUIDE	29
–	–	1	1	1-455888-1	SPACER, FRONT SHEAR DEP	28
–	–	2	2	1-22284-0	SPRING, DRAG	27
–	–	1	1	690546-1	LEVER, DRAG RELEASE	26
–	–	1	1	240792-1	DRAG, TERMINAL	25
–	–	1	1	6-690440-5	GUIDE, STRIP (REAR)	24
–	–	1	1	690438-1	GUIDE, STRIP (FRONT)	23
–	–	1	1	1338200-5	SPACER, WIRE CRIMPER	22
						21
						20
–	–	1	1	1-690472-6	STRIPPER	19
						18
						17
						16
						15
						14
						13
–	–	1	1	5-22280-0	SPRING, SHEAR	12
–	–	1	1	690461-2	STOP, SHEAR	11
–	–	1	1	1-690459-0	HOLDER, SHEAR (FRONT)	10
–	1	1	1	454276-5	SHEAR, FLOAT (FRONT)	9
–	1	1	1	8-683403-5	ANVIL	8
						7
						6
–	–	1	1	1338126-2	DEPRESSOR, SHEAR (FRONT)	5
–	–	AR	AR	1338200-3	SPACER	4
–	–	AR	AR	1338200-2	SPACER	3
–	–	AR	AR	1338200-1	SPACER	2
–	1	1	1	1338125-8	CRIMPER, WIRE	1
-78	-77	-2	-1	PART NO	DESCRIPTION	ITEM NO

PARTS LIST

1. RECOMMENDED SPARE PARTS.
2. GREASE LIGHTLY.
3. GUARD MUST BE IN PLACE WHEN OPERATING APPLICATOR IN A BENCH MACHINE.
4. SEE DRAWING FOR COMPONENTS
5. ITEM NOT SHOWN
6. INSTALL ITEM 2,3 & 4 AS REQUIRED SHIP REMAINING ITEMS WITH APPLICATOR
7. CRIMPER BOLT MUST BE LOOSENED TO CHANGE CRIMP HEIGHT ADJUSTING WHEEL. BE SURE TO SEAT THE CRIMPER AGAINST THE ADJUSTING WHEEL AND REALIGN THE TOOLING.
8. PLACE ITEM 112 BETWEEN ITEM 71 AND 75 ON -1. PLACE ITEM 112 BETWEEN ITEM 71 AND 68 ON -2.

THIS DRAWING IS A CONTROLLED DOCUMENT.

DIMENSIONS: INCHES

TOLERANCES UNLESS OTHERWISE SPECIFIED:
0 PLC ± –
1 PLC ± –
2 PLC ± .25
3 PLC ± –
4 PLC ± –
ANGLES ± –

MATERIAL –
FINISH –

DWN B.HIGMAN 25APR02
CHK B.HIGMAN 25APR02
APVD T.BENCHOFF 25APR02
PRODUCT SPEC –
APPLICATION SPEC –
WEIGHT 0.000000

TE Connectivity

NAME SIDE FEED THRU SPLICE APPLICATOR – –

SIZE	CAGE CODE	DRAWING NO	RESTRICTED TO
A1	00779	C-566420	–

CUSTOMER DRAWING SCALE – SHEET 1 OF 1 REV F1

4805 (1/15)