© 2020 TE Connectivity. All Rights Reserved.

REVISIONS					
P	LTR	DESCRIPTION	DATE	DWN	APVD
	C2	REVISED ECR-20-006447	16JUL2020	VI	SPB

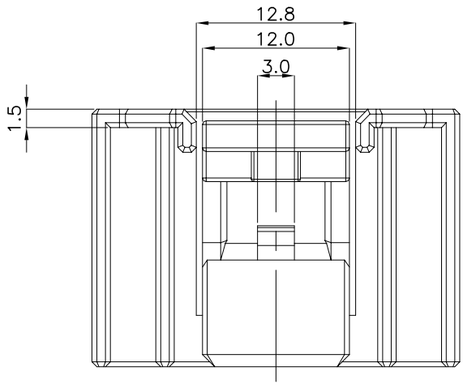

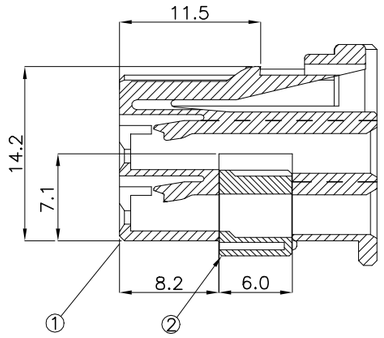

SECTION A—A

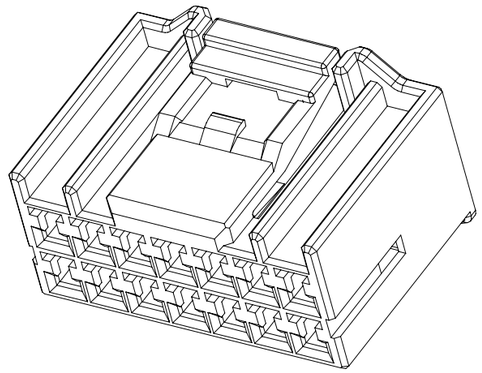

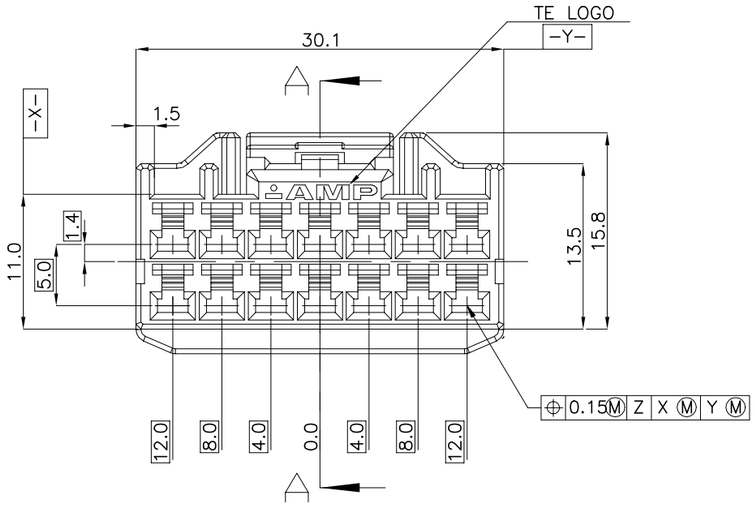

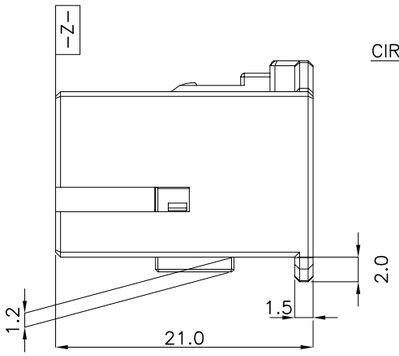

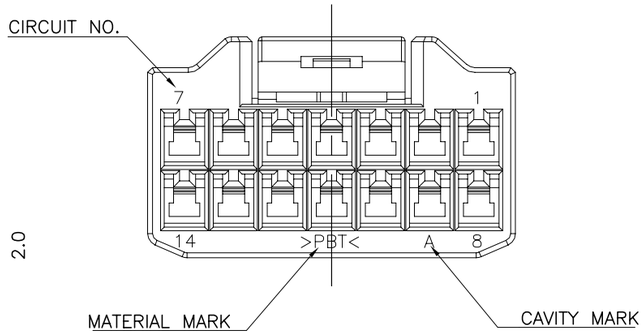

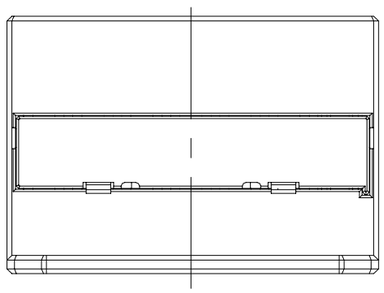

OBSOLETE

NO	COLOR	MATERIAL	DESCRIPTION	P/N	ASSY P/N 0-936199-8	0-936199-7	0-936199-6	0-936199-5	0-936199-4	0-936199-3	0-936199-2	0-936199-1
1	BLUE	PBT	PLUG	0-936200-8	1							
	GREEN	PBT	PLUG	0-936200-7		1						
	RED	PBT	PLUG	0-936200-6			1					
	YELLOW	PBT	PLUG	0-936200-5				1				
	BROWN	PBT	PLUG	0-936200-4					1			
	D/GRAY	PBT	PLUG	0-936200-3						1		
	BLACK	PBT	PLUG	0-936200-2							1	
	NATURAL	PBT	PLUG	0-936200-1								1
2	NATURAL	PBT	DBL	0-936198-1	1	1	1	1	1	1	1	1

TOLERANCES UNLESS OTHERWISE SPECIFIED:

0 <XX<10	± 0.2
10<XX<30	± 0.25
30<XX	± 0.3
ANGLES	± 3°

NOTES.
1. THE MATING HSG. P/N ; 936209
2. APPLIED CONTACT P/N ;
   090 II REC.- 368083,368084,368085 C1 C1
   090 III REC.- 1743654,1743655,1743656,1897753,1897598

-주기-
1. **상대 하우징** P/N. ; 936209
2. **적용단자** P/N. ; 090 II REC.- 368083,368084,368085 C1 C1
   090 III REC.- 1743654,1743655,1743656,1897753,1897598

THIS DRAWING IS A CONTROLLED DOCUMENT.

DIMENSIONS: mm

TOLERANCES UNLESS OTHERWISE SPECIFIED:

0 PLC	± –
1 PLC	± –
2 PLC	± –
3 PLC	± –
4 PLC	± –
ANGLES	± –

MATERIAL: SEE TABLE

FINISH: –

DWN: KT JUNG –
CHK: JW JUNG –
APVD: HG CHO –
PRODUCT SPEC: —
APPLICATION SPEC: —
WEIGHT: 0

TE Connectivity

NAME: 090III 14P PLUG ASS'Y
–
–

SIZE	CAGE CODE	DRAWING NO	RESTRICTED TO
A3	00779	C-936199	—

CUSTOMER DRAWING

SCALE 1:1 | SHEET 1 OF 1 | REV C2