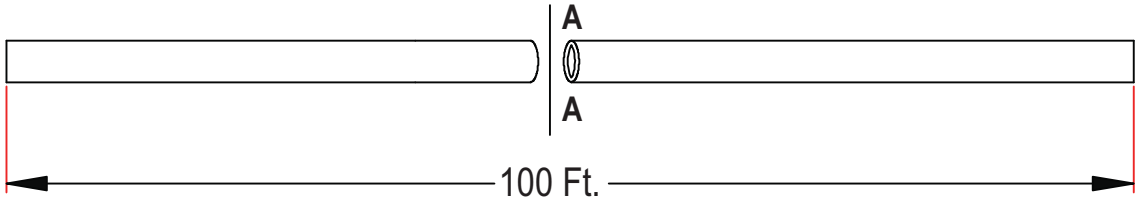


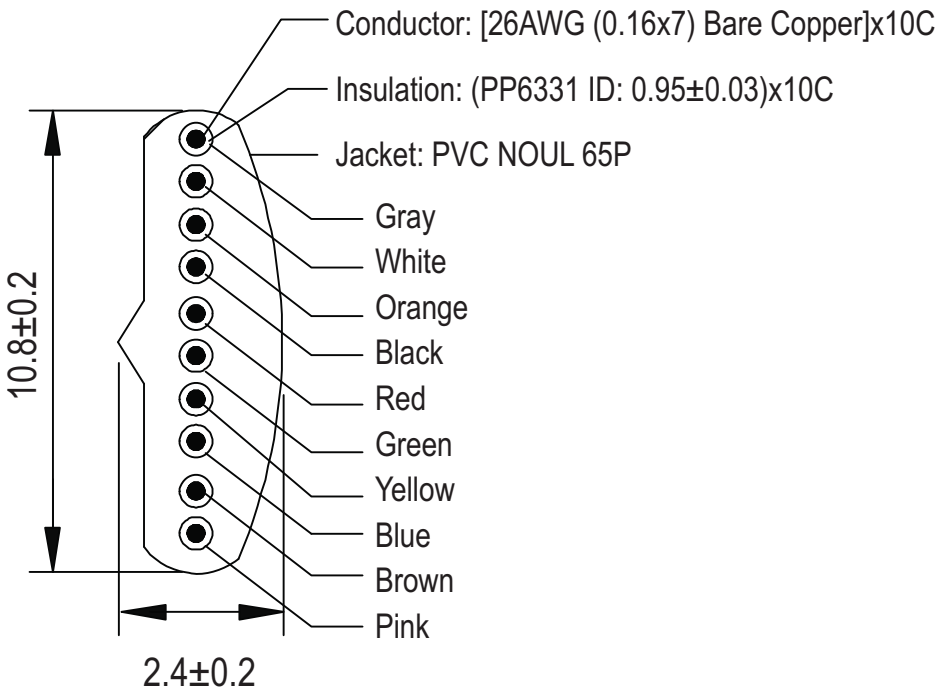


**Sec: A - A**

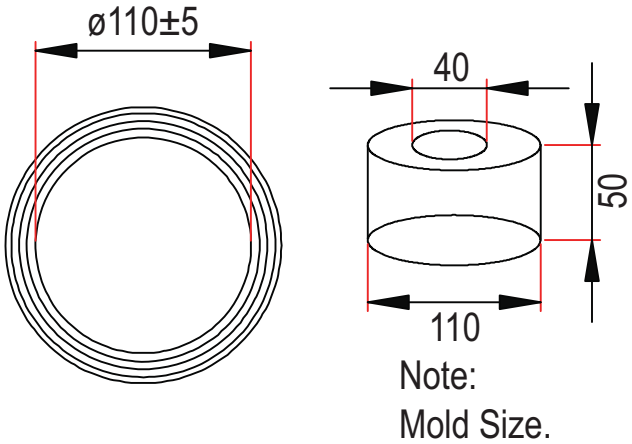


# 100Ft/R. PE Film

Unit: MM

| | | | | | | | | |
|---|---|---|---|---|---|---|---|---|
| Scale | 1:1 | | | | | | | Name |
| TOLERANCE | | | | | | Drawn | 12.19.11 | Chappell |
| X.X | ±0.40 | | | | | Approved | | |
| X.XX | ±0.25 | | | | | | | |
| X.XXX | ±0.15 | | | | | | | |
| Angle | ±3° | | | | | | | |
| | | | Modification | Date | Name | | | |

**Item No.**
**AT-K-26-10-B/100-R**

**Title** Modular Straight cable - Raw, 10 Contact, 26AWG, Black, 100Ft.

Drawing No.

**rev00**

Replace

Sheet

RoHS Complaint

ASSMANN WSW components