MODEL NO.	"L"	"PL"	P/N
BM.753S	36	1.00	17251
BM.753SM1.375	36	1.375	21048
BM.753SM14	36	14.0	20793
BM.753SM2	36	2.00	17252
BM.753SM3	36	3.00	20718
BM.753SM4	36	4.00	00000
BM.754S	48	1.00	17371
BM.754SM1.7	48	1.70	20789
BM.754SM2	48	2.00	20608
BM.755SM2	60	2.00	20162
BM.756S	72	1.00	20433
BM.756SM2	72	2.00	20917
BM.752S	24	1.00	17248

MODEL NO.	"L"	"PL"	P/N
BM.752SM.75	24	.75	20235
BM.752SM1.375	24	1.375	20876
BM.752SM1.5	24	1.50	20424
BM.752SM2	24	2.00	20576
BM.752SM3	24	3.00	17249
BM.752SM5	24	5.00	20004
BM.752SM5.5	24	5.50	21177
BM.751SM2	12	2.00	66817
BM.754SM2M600	48	2.00	75542
BM.753SM.5	36	.50	21270
BM.751S	12	1.00	17908
BM.752SM.25	24	.25	20149
BM.752SM.5	24	.50	17902

MODEL NO.	"L"	"PL"	P/N
BM.759.83S	118	1.00	00000
BM.753SM2M600	36	2.00	20664
BM.752SM2M600	24	2.00	20109
BM.752SM600	24	1.00	21281
BM.753SM1.5	36	1.50	21538
BM.756SM2M600	72	2.00	21766
BM.7510SM2M600	120	2.00	21767
BM.752SM.375	24	.375	23371
BM.752SM.19	24	.187	23563
BM.753SM600	36	1.00	24596
BM.751.1SM3	13	3.00	00000
BM.752SM.7	24	.70	24306

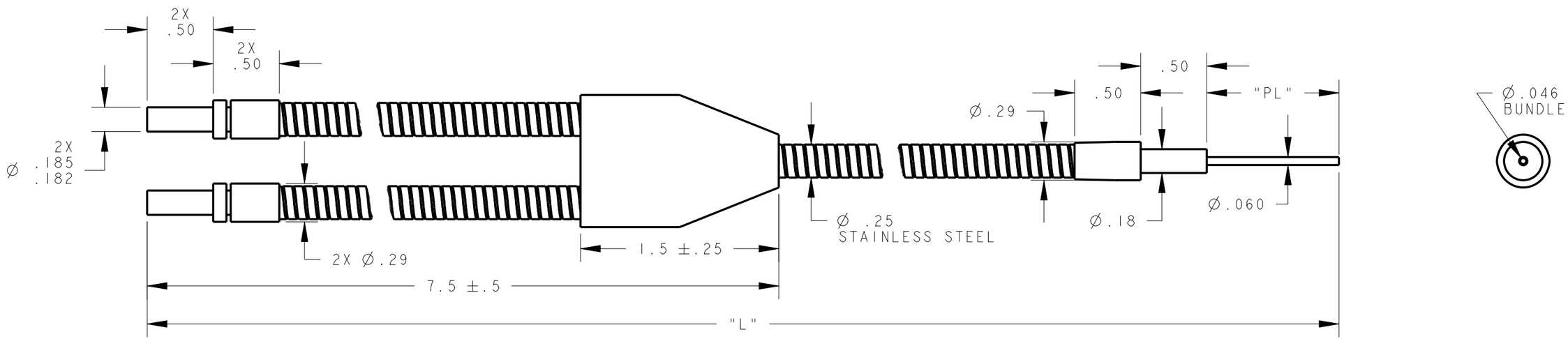

NOTES:

1. 'M600' SUFFIX INDICATES FIBER POTTED ON ANGLED END WITH EPOXY OPERATES IN MAX. TEMPERATURE OF 600°F.

NOTES:
1. ALL DIMENSIONS ARE MILLIMETERS [INCHES] UNLESS OTHERWISE NOTED.
2. REFER TO "www.bannerengineering.com" FOR ADDITIONAL DATA AND SPECIFICATIONS.

This drawing is the property of BANNER ENGINEERING CORP. Any use or reproduction, in any form, without prior written permission of Banner is prohibited.
© 2015 Banner Engineering Corp.

THIRD ANGLE PROJECTION

BANNER ENGINEERING CORP.
www.bannerengineering.com

TITLE

BM.75 SERIES SS TERMINATED

SIZE	DRAWING NO.	REV.
B	161926	A
SCALE 5:4	SHEET 1 OF 1	

CREO